在使用亚星客车之前，请仔细阅读
该说明书，并将说明书妥善保存，
以便将来参考。

星级客车 钻石品质
STAR BUS DIAMOND QUALITY

ASIASTAR

JS6120GHBEV 系列
纯电动客车使用说明书
Instruction Manual for Pure Electric Bus



扬州亚星客车股份有限公司
YANGZHOU YAXING MOTOR COACH CO., LTD.

前 言

尊敬的女士/先生:

感谢您驾驶亚星客车!

亚星客车将以高标准、高效益地兑现所有承诺;以卓越的质量、安全的产品、一流的服务、诚实的态度给您提供安全舒适的感受。

为了解和掌握车辆的使用、保养和注意事项，请您认真阅读。

说明书提供的车辆配置与实际所购车辆配置可能有差异，请以实际所购车辆为准，说明书中的图形为示意图，仅供参考；该系列车型均参照本说明书使用。

除本说明书之外，如随车发放有其他说明书，请在车辆使用前一并查阅。

如果您对本系列车型还有其他疑问、看法或建议而随车资料的内容未尽详细，可根据说明书封面联系方式进行咨询，我们随时欢迎您提出问题、建议和批评。

声 明

● 如何使用说明书

说明书提供了该型系列客车的有关操作、驾驶、安全、维护和保养等必要介绍，所以请您务必详细阅读。本系列车型只能用于本说明书规定用途，凡未按本说明书进行操作的，本公司概不承担由此引发的任何法律或经济责任及连带责任。因使用未经本公司认可的配件或接受未经本公司认可的维修服务，由此引发的一切后果，本公司概不承担任何责任。

本说明书内示意图仅供参考，若实物与图形不符，以实车配置为准。

本说明书出版时为最新版本，后期由于产品技术升级，内容可能会有所改动，本公司保留对该说明书进行修改、修订的权利，修改内容恕不另行通知。

请将说明书放置在您的车内，以便您无论何时需要说明书时均能找到。

● 维护和保养

发生故障或作定期维修时，请尽可能委托亚星维修站维修保养。

●安全警告和符号

在本说明书中，有三种安全标识，他们的标识如下:



——危险：表示如不避免则将会引发事故导致人身伤害甚至死亡的警示。



——警告：表示如不避免则可能事故或人身伤害的警示。



——注意：表示如不避免则可能导致车辆损坏的警示。

●环保

用过的零部件、废油、废液及低压蓄电池会导致环境污染，请按照法规要求正确处置。

祝您驾车安全愉快!

请认真阅读，阅后妥善保存。

禁止对车辆进行非法改装!

目录

第一章 综 述 Overview 1

1.1. 车辆使用条件 Vehicle conditions of use 1

1.2. 车辆外观、布置图及铭牌 Vehicle exterior, layout and nameplate 3

1.2.1. 车辆外观介绍（示意图仅供参考，具体以实车为准） Vehicle appearance introduction (schematic diagram for reference only, subject to the actual vehicle) 3

1.2.2. 布置图 Layout plan 8

1.2.3. 常用轮胎规格及充气压力 Common tyre sizes and inflation pressures 10

1.2.4. 四轮定位数据 Four-wheel alignment data 10

1.2.5. 车辆铭牌 Nameplate 12

第二章 操纵、指示、信号符号及故障指示、报警说明 14

Chapter 2: Manipulation, Indication, Signal Symbols, Fault Indication, and Alarm Instructions 14

2.1. 驾驶区 Driving area 14

2.2. 仪表 Instrument 16

2.2.1. 仪表盘及按钮说明 Instrument and button descriptions 16

2.2.2. 仪表指示标识说明 Description of Instrument Indicator Signs 17

2.2.3. 仪表显示界面说明 Instrument display interface description 31

2.3. 部件操作 Parts Operation 36

2.3.1. 电源、启动、熄火开关 Power, start, stop switch 36

2.3.2. 组合开关 Modular switch 37

2.3.3. 档位器 Gear lever 39

2.3.4. 电喇叭 Electric horn 42

2.3.5. 驻车开关 Park switch 42

2.3.6. 车辆 OBD 接口 Vehicle OBD port 44

2.3.7. 车外后视镜开关（选装） Exterior mirror switch (optional) 45

2.3.8. 近光灯调节开关（选装） Low beam adjustment switch (optional) 46

2.3.9. 翘板开关 Rocker switches 47

2.3.10. 行驶稳定控制系统 Driving Stability Control (DSC) 90

2.3.11. 制动防抱死（ABS）及防侧滑（ASR）系统 94

2.3.12. 倒车监视器 Reversing monitor 96

2.3.13. 收放机 Media player 103

2.3.14. 行车记录仪 Vehicle recorder 109
2.3.15. 电子钟 Electronic clock 123
2.3.16. 空调面板 Air-conditioning panels 124
2.3.17. 录像监控系统 Video surveillance system 141
2.3.18. 车内外路牌及控制器 Road signs and controllers inside and outside the vehicle 141
2.3.19. 下车门铃 Drop-off doorbell 143
2.3.20. 翻转踏步 Turn over step (on floor) 144
2.3.21. ECAS(ELC)系统 ECAS (ELC) system 146
2.3.22. 主动安全系统（选装） Active safety systems (optional) 148
2.3.23. 驾驶行为监测系统（选装） Driving behaviour monitoring system (optional) 157
2.3.24. 360 环视（选装） 360 Around View (optional) 159
2.3.25. 电子后视镜 Electronic rear-view mirror 162
2.3.26. 行驶区域信息提示系统（MOIS） 173
2.3.27. 盲点信息提示系统（BSIS） 176
2.3.28. 智能限速系统（ISA） 180
2.3.29. 司机睡意和注意力警告（DDAW） 183
2.3.30. 酒精互锁系统 Alcohol Interlocking System 187
2.4. 新能源部件 New energy parts 188
2.4.1. 整车控制器（VCU） 189
2.4.2. 集成式电控系统 Integrated electronic control system 190
2.4.3. 动力电池系统 Power Battery System 194
2.4.4. 电动空压机总成 Electric air compressor assembly 196
2.4.5. 电动转向油泵系统 Electric steering oil pump system 197
2.4.6. 除霜及暖风 Defrosting and heating 199
2.4.7. 充电插座 Charging socket 204
2.4.8. 冷却系统（ATS） 207
2.4.9. 动力电池冷却系统（TMS） 208
2.4.10. 铅酸蓄电池 Battery 210
第三章 驾 驶 Driving 213
3.1. 起步 Start 213
3.1.1. 车辆使用前准备和检查 Vehicle preparation and inspection before use 213
3.1.2. 起步操作流程 Start-up procedure 214

3.1.3. 驾驶员座椅 Driver's seat 214
3.1.4. 乘客座椅 Seat 230
3.1.5. 方向盘调整 Steering Wheel Adjustment 231
3.2. 行驶 Driving 232
3.2.1. 雪地模式功能 Snow mode function 232
3.2.2. 驾驶座椅互锁 Driver's seat interlocking 233
3.2.3. ASR 互锁功能 ASR Interlock Function 234
3.2.4. 车门互锁 Door interlocking 235
3.2.5. 制动能量回收 Brake Energy Recovery (BER) 236
3.2.6. 低速提示音功能 Low-speed beep function 236
3.3. 停车 Parking 237
3.4. 节能 Energy-saving 238
3.5. 拖车 Towing vehicle 239
第四章 车辆安全 Vehicle safety 242
4.1. 车辆涉水行驶 Vehicle driving through water 242
4.2. 冰雪路面行驶 Driving on snow and ice 244
4.3. 灭火器 Fire extinguisher 246
4.3.1. 手提式干粉灭火器 Portable dry powder fire extinguisher 246
4.3.2. 手自一体超细干粉式灭火器 Hand-operated ultra-fine dry powder fire extinguisher 249
4.3.3. 动力电池箱灭火系统 Power Battery Box Fire Extinguishing System 251
4.3.4. 客舱固定灭火系统（选装） Cabin fixed fire extinguishing system (optional) 254
4.4. 禁止事项 Prohibition 256
4.5. 紧急处理 Emergency management 257
4.6. 其它安全设施 Other security facilities 261
4.6.1. 安全锤 Safety hammer 261
4.6.2. 安全带 Safety belts 262
4.6.3. 安全出口 Safety exit 266
4.7. 乘客门及紧急开关 Passenger doors and emergency switches 266
4.8. 驾驶员防护栏 Driver guardrail 268
4.9. 遮阳帘 Sunshading curtain 269
4.10. 三角警告牌和随车工具 Warning triangle and accompanying tools 270
4.11. 气压表征数据 Barometric characterisation data 271

第五章 车辆运行检查及维护保养 Vehicle operation inspection and maintenance 272

5.1. 日常维护项目 Routine maintenance projects 272

5.2. 新车走合 New vehicle maintenance 272

5.3. 驾驶前日常检查 Pre-driving routine check 273

5.3.1. 日常检查 Routine check 273

5.3.2. 检查前注意事项 Pre-examination precautions 273

5.3.3. 冷机检查项目 Chiller Inspection Items 274

5.3.4. 起动检查 Start-up inspection 274

5.3.5. 车辆使用中的注意事项 Precautions in the use of vehicles 275

5.4. 车辆运行后定期检查 Periodic inspection of vehicles after operation 275

5.4.1. 每运行一周的驾驶前、后检查 Pre- and post-drive inspections for each week of operation 275

5.4.2. 每运行两周的驾驶前、后检查 Pre- and post-drive inspections every fortnight of operation 275

5.5. 电器维护保养注意事项 Electrical Maintenance Precautions 276

5.5.1. 维护保养前注意事项 Precautions before maintenance 276

5.5.2. 仪表维护 Instrument Maintenance 277

5.5.3. 高压电器维护保养注意事项 High-voltage electrical maintenance precautions 279

5.5.4. 高压维护要求 High Voltage Maintenance Requirements 279

5.5.5. 高压手动维护开关（MSD） 280

5.6. 动力电池维护保养 Power Battery Maintenance 281

5.6.1. 使用注意事项 Precautions for use 281

5.6.2. 维护与检查 Maintenance and Inspection 281

5.6.3. 存放要求 Storage requirements 282

5.6.4. 特别说明 Special notes 283

5.6.5. 常见电池系统故障 Common Battery System Faults 283

5.7. 集成式控制器的使用与维护 Use and Maintenance of Integrated Controllers 283

5.7.1. 安全注意事项 Safety Notes 283

5.7.2. 集成式控制及驱动电机维护项目 Integrated control and drive motor maintenance project 285

5.7.3. 产品环境及冷却要求 Product environment and cooling requirements 287

5.7.4. 系统常见故障处理 Troubleshooting of common system problems 289

5.8. 电动液压助力转向泵的使用与维护 Use and maintenance of electro-hydraulic power steering pumps 290

5.8.1. 维护保养说明 Maintenance instructions 290

5.8.2. 定期检查 Regular inspection 291
5.8.3. 常见故障及排除 Common faults and troubleshooting 292
5.9. 电动空压机的使用与维护 Use and Maintenance of Electric Air Compressors 293
5.9.1. 无油电动活塞式空压机维护保养说明 Oil-free electric piston compressor maintenance instructions 293
5.9.2. 有油式空压机保养要求 Maintenance Requirements for Oiled Air Compressors 294
5.9.3. 定期检查 Regular inspection 294
5.9.4. 常见故障及排除 Common faults and troubleshooting 295
5.9.5. 例行保养和易损件清单 Routine maintenance and wearing parts list 295
5.10. 底盘维护保养 Chassis maintenance 296
5.10.1. 底盘日常维护保养 Chassis routine maintenance 296
5.10.2. 车辆油液更换标准及关键总成参数 Vehicle Fluid Change Standards and Key Assembly Parameters 297
5.10.3. 轮胎使用保养 Tyre maintenance 298
5.10.4. 各里程段维护保养内容 Maintenance content by mileage section 299
5.11. 车身维护保养 Body maintenance 301
5.11.1. 车辆维护注意事项 Vehicle Maintenance Notes 301
5.11.2. 洗车 Vehicle washing 301
5.12. 车辆停放 Vehicle parking 305
5.12.1. 停放要求 Parking requirements 305
5.12.2. 车辆停放场地要求 Vehicle parking space requirements 307
5.12.3. 检查项目 Inspection items 307
第六章 附录 Appendix 311
6.1. 汽车底盘常用螺栓螺母扭矩 Commonly used bolts and nuts torque of automobile chassis 311
6.1.1. 常用扭矩参数表 Table of common torque parameters 311
6.1.2. 施必牢螺母扭矩参数表 Spitra nut torque parameter table 312
6.1.3. 没有特殊说明的螺栓螺母扭矩 Bolt nut torque without special instructions 312
6.2. 制动器盘式/鼓式参数 Brake disc/drum parameters 314
6.3. 部分动力转向器对应的安装扭矩 Partial power steering for the installation torque 314
6.4. 随车技术文件 On-board technical documentation 316
6.5. 动力电池溯源 Power battery traceability 316
6.6. 车辆主要配置参数 The main configuration parameters of the vehicle 317

第一章 综 述

1.1.车辆使用条件

为确保行驶安全，严禁驾驶员超速、疲劳行驶。安全说明如下：

1、禁止无关人员进入高压设备仓。

2、非纯电动动力专业维护人员禁止对整车的高压器件（高压线、储能系统、主电机、电动助力转向及各高压部件控制器等）进行拆装和触碰。

3、为了确保客车安全使用及维护，相关人员在对纯电动动力车辆进行常规 检修、维护、保养等操作时，必须先进行四个操作：关闭钥匙开关（见 2.3.1 章节图 16/17 点火开关示意图 ），取下钥匙；关闭电源总开关（见 2.3.9 章节图 33 翘板开关示意图）；切断手动电源总开关（见 2.4.10 章节图 139 蓄电池电器舱布置示意图）；切断高压（按操作规范拉下高压手动维护开关（MSD）见 5.5.5 章节图 198 手动维护开关示意图），方可进行其它相关作业。

4、高压元件的维护必须由持能够操作 B 级电压电路作业证的合格电工执行，并严格遵守电工安全操作规程进行。

注:B 级电压电路,即最大工作电压 U 满足: 60V(DC)<U≤1500V(DC)或 30V(AC)<U≤1000V(AC)的电路。

Chapter 1 Overview

1.1. Vehicle usage conditions

To ensure driving safety, drivers are strictly prohibited from speeding or driving when fatigued. The safety instructions are as follows:

1. Unauthorized personnel are prohibited from entering the high-voltage equipment compartment.

2. Non pure electric power maintenance personnel are prohibited from disassembling, assembling, or touching the high-voltage components of the vehicle, such as high-voltage lines, energy storage systems, main motors, electric power steering, and various high-voltage component controllers.

3. In order to ensure the safe use and maintenance of buses, relevant personnel must first perform four operations when carrying out routine maintenance, upkeep, and other operations on pure electric vehicles: turn off the key switch (see Figure 16/17 ignition switch schematic diagram in Chapter 2.3.1), and remove the key; Turn off the main power switch (see Figure 33 in Chapter 2.3.9 for the schematic diagram of the rocker switch); Cut off the manual power main switch (see Figure 139 in Chapter 2.4.10 for the layout diagram of the battery electrical compartment); Cut off the high voltage (according to the operating specifications, pull down the high voltage manual maintenance switch (MSD) as shown in Figure 198 of Chapter 5.5.5 for the schematic diagram

of the manual maintenance switch) before proceeding with other related operations.

4. The maintenance of high-voltage components must be carried out by qualified electricians who hold a B-level voltage circuit operation certificate and strictly comply with electrical safety operating procedures.

Note: B-class voltage circuit, which refers to a circuit with a maximum operating voltage U that meets the requirements of 60V (DC)<U ≤ 1500V (DC) or 30V (AC)<U ≤ 1000V (AC).

1.2.车辆外观、布置图及铭牌

1.2.1.车辆外观介绍（示意图仅供参考，具体以实车为准）

1.2. Vehicle appearance, layout and nameplate

1.2.1. Introduction to Vehicle Appearance (The schematic diagram is for reference only, please refer to the actual vehicle for details)

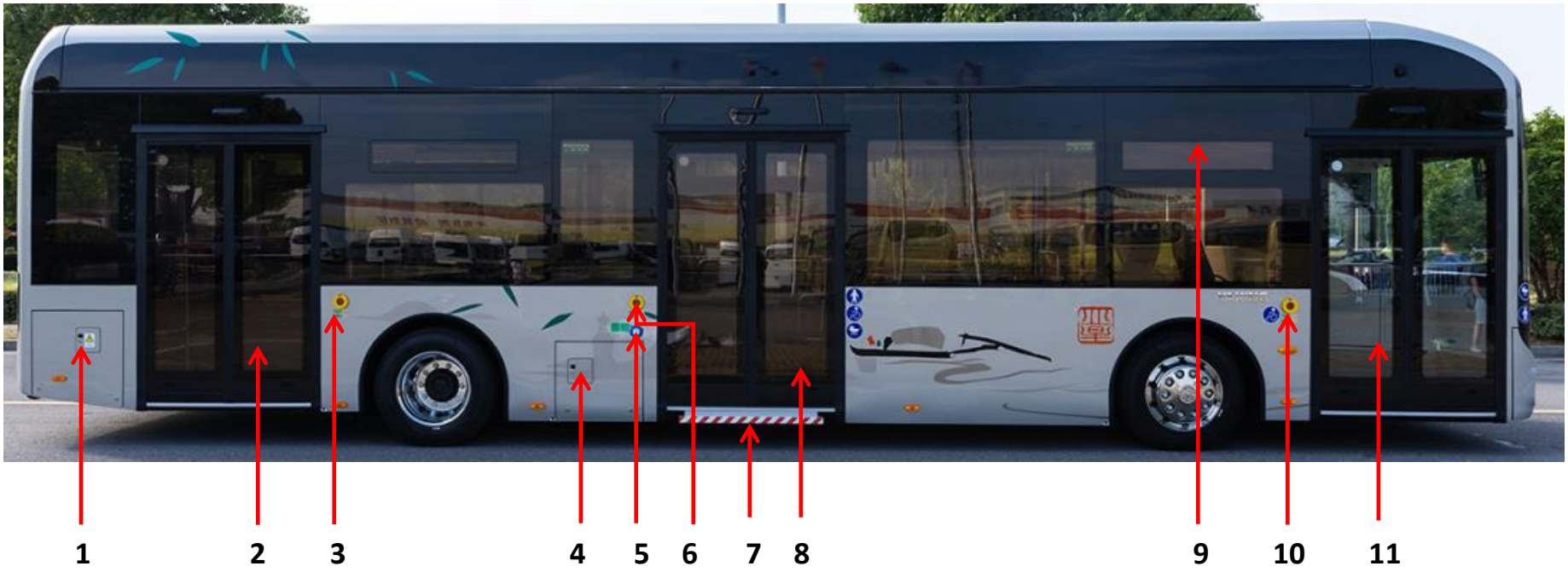

图 1 JS6120GHBEV 车型右侧围示意图

Figure 1 Schematic diagram of the right side panel of JS6120GHBEV model

1. 充电口小门
Maintenance compartment below the driving area

2. 后乘客门
.Centralized lubrication maintenance door

3. 后乘客门应急控制阀
Low voltage power supply maintenance door

4. 暖风机加油小门
Maintenance door for motor cooling water tank

5. 中乘客门应急控制阀
Charging port small door

6. 残疾人请求按钮
Electric steering pump maintenance door

7. 电动残疾人伸缩踏步
Electric steering pump maintenance door

8. 中乘客门
Middle passenger door

9. 侧路牌显示区
Side road sign display area

10. 前乘客门应急控制阀
Emergency control valve for front passenger door

9. 前乘客门
Front passenger door



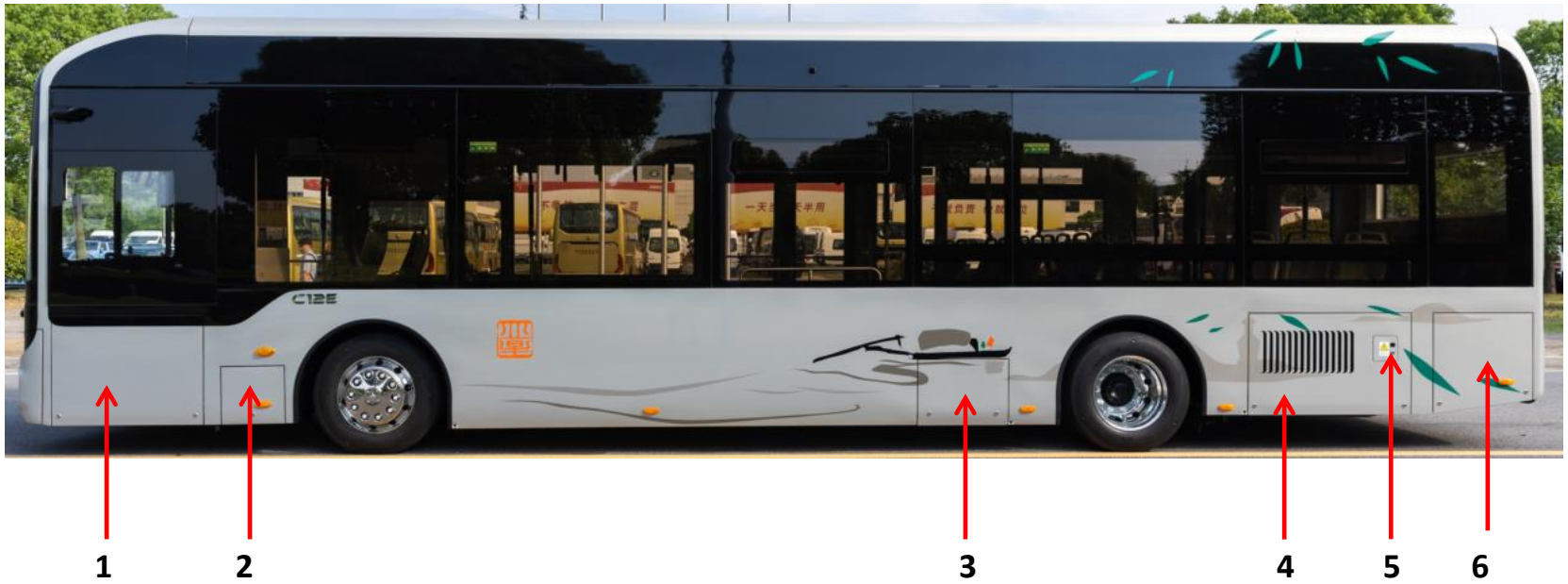

图 2 JS6120GHBEV 车型左侧围示意图

1. 驾驶区下方检修仓 Maintenance compartment below the driving area

2.集中润滑检修门 Centralized lubrication maintenance door

3. 低压电源检修门 4. Low voltage power supply maintenance door

4. 电机冷却水箱检修门 Maintenance door for motor cooling water tank

5.充电口小门 Charging port small door

5. 电动转向泵检修门 Electric steering pump maintenance door

6. 前部高压电池装饰罩 Front high-voltage battery decorative cover

7. 空调(顶盖中部) Air conditioner (middle of top cover)

10. 顶部装饰件 Top decorative piece

8. 后部高压电池装饰罩 Rear high-voltage battery decorative cover



图 3 JS6120GHBEV 车型前后围示意图

1. 前路牌
Front road card

2. 前示廓灯
Front clearance light

3.机械后视镜（电子后视镜选装）
Mechanical rearview mirror (optional electronic rearview

4.前风挡玻璃
Front windshield

5. 前乘客门车外开关
Front passenger door exterior switch

6.近光带日行灯
Low beam daytime running light

mirror)

7. 远光带位置灯

High beam with position light

8. 转向灯、日行灯

Turn signal, daytime running light

9. 前雾灯

Front fog lamp

10. 后示廓灯

Rear clearance light

9. 后路牌 Back Road Card

10. 后风挡玻璃

Rear windshield

11. 后仓门

Rear compartment door

14. 手动电源总开关

Manual power main switch

15. 组合后尾灯

Combination rear taillights

16.后雾灯

Rear fog lamp

1.2.2.布置图 1.2.2. Layout plan

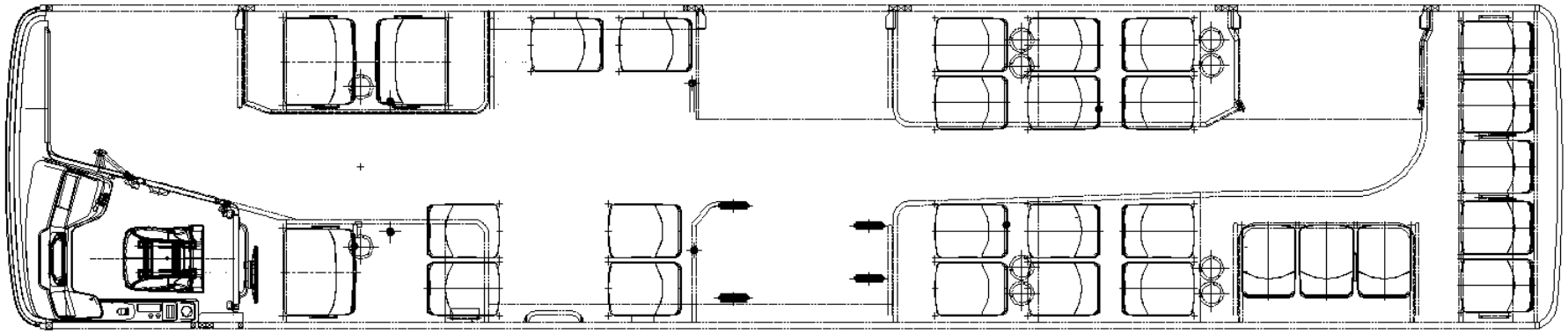

图 4 JS6120GHBEV 车型座椅分布示意图

Figure 4 Schematic diagram of seat distribution for JS6120GHBEV model

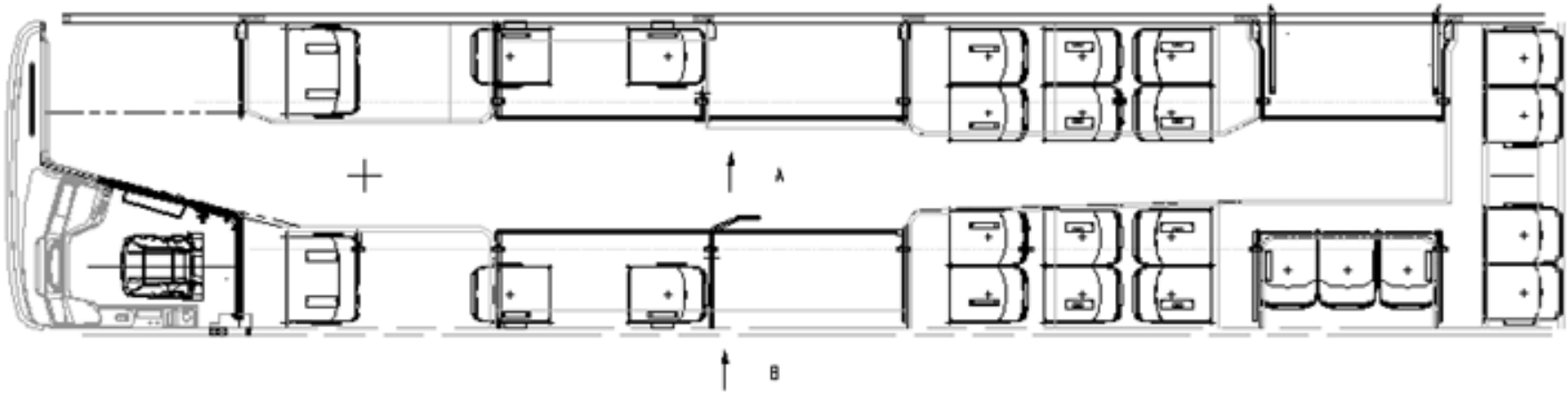

图 5 JS6120GHBEV 车型座椅分布（示例二）示意图

Figure 5 Schematic diagram of seat distribution of JS6120GHBEV model (Example 2)

动力系统布置示意图

Schematic diagram of power system layout

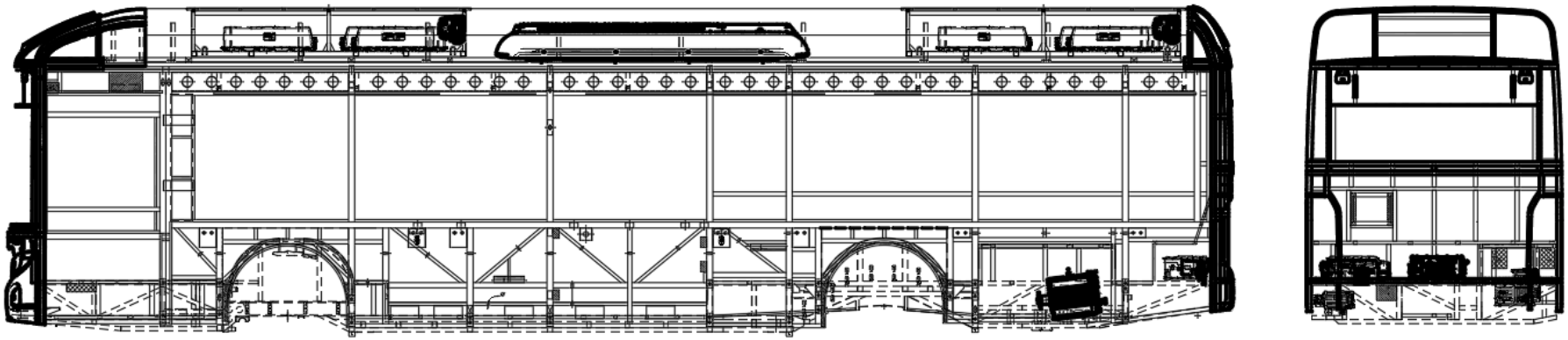

图 6 JS6120GHBEV 车型动力系统分布示意图

Figure 6 Schematic diagram of power system distribution of JS6120GHBEV model

1.2.3.常用轮胎规格及充气压力

1.2.3. Common tire specifications and inflation pressure

车型 Vehicle model	轮胎规格 Tire specifications	单胎气压（MPa）Single tire pressure (MPa)	双胎气压 （MPa）Twin tire pressure (MPa)	层级 Hierarchical structure	备注 remarks
JS6120GHBEV	275/70R22.5	0.9	0.9	18	参考轮胎标识 Refer to tire identification

1.2.4.四轮定位数据

1.2.4. Four wheel alignment data

车型号 Model number	车桥 Car axle	主销内倾角（°）Main sales inclination angle（°）	主销后倾角（°）Main sales tilt angle（°）	前轮外倾角（°）Front wheel camber angle（°）	前束（mm）Front wheel camber angle（°）	最大内转角（°）Maximum internal rotation angle（°）	最大外转角（°）Maximum external rotation angle（°）	前气囊高度 Front airbag height	后气囊高度 Rear airbag height
JS6120GHBEV	吉客低门盘桥（空悬）Jike Low Gate Pan Bridge (Suspended)	8.5	2.5	0	0～2	48	38	245	270

1.2.5.车辆铭牌

1.2.5. Vehicle nameplate

1. 铭牌信息涉及车辆重要参数,可根据下表铭牌位置信息表取相关信息。

1. The nameplate information involves important parameters of the vehicle, and relevant information can be obtained from the nameplate location information table in the following table.

商标、型号位置：Trademark and model location:	车身前、后围 Front and rear body panels
电机铭牌位置：Location of motor nameplate:	驱动电机壳体 Drive motor housing
驱动电机钢印位置：Position of drive motor stamp:	驱动电机壳体 Drive motor housing
车辆识别代号（VIN）位置：Vehicle Identification Number (VIN) Location:	车辆右侧前轮处结构件外侧 Outer side of structural component at the right front wheel of the vehicle on the rear facade of the front passenger door step
产品铭牌：Product nameplate:	前乘客门踏步后立面 Front passenger door step rear facade

2.产品铭牌包含有：品牌、车辆识别代号（VIN）、产品型号、电机型号等车辆识别信息。当您需要维修、配件服务时，提供准确的车辆识别代号（VIN）、产品编号信息有助于所需信息的准确落实。

2. The product nameplate includes vehicle identification information such as brand, vehicle identification number (VIN), product model, and motor model. Providing accurate vehicle identification number (VIN) and product number information when you need repair or accessory services can help ensure the accurate implementation of the required information.

3. 产品铭牌显示信息（**车辆具体信息以实车铭牌为准**）如下：

3. The information displayed on the product nameplate (specific vehicle information shall be subject to the actual vehicle nameplate) is as follows:

4.

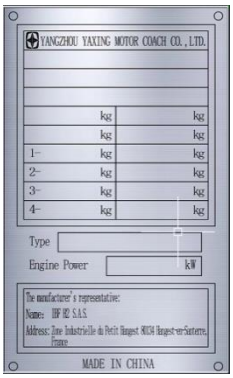

图 7 产品铭牌示意图



图 8 产品铭牌位置示意图

Figure 7 Schematic diagram of product nameplate

Figure 8 Schematic diagram of product nameplate location

5.车辆识别代号（VIN）位置：每车仅一处 VIN 代号位置，不同型号车辆具体位置有所差异，正常情况下：车辆右侧前轮处结构件外侧。Vehicle Identification Number (VIN) Location: Each vehicle has only one VIN location, and the specific location may vary for different models of vehicles. Under normal circumstances, it is located on the outer side of the structural component at the front wheel on the right side of the vehicle.

打刻示意图如下图所示：The schematic diagram of engraving is shown in the following figure:



图 9 VIN 示意图



图 10 VIN 打刻位置示意图

Figure 9 VIN schematic diagram

Figure 10 Schematic diagram of VIN engraving position

第二章 操纵、指示、信号符号及故障指示、报警说明

Chapter 2: Manipulation, Indication, Signal Symbols, Fault Indication, and Alarm Instructions

2.1.驾驶区

2.1. Driving area

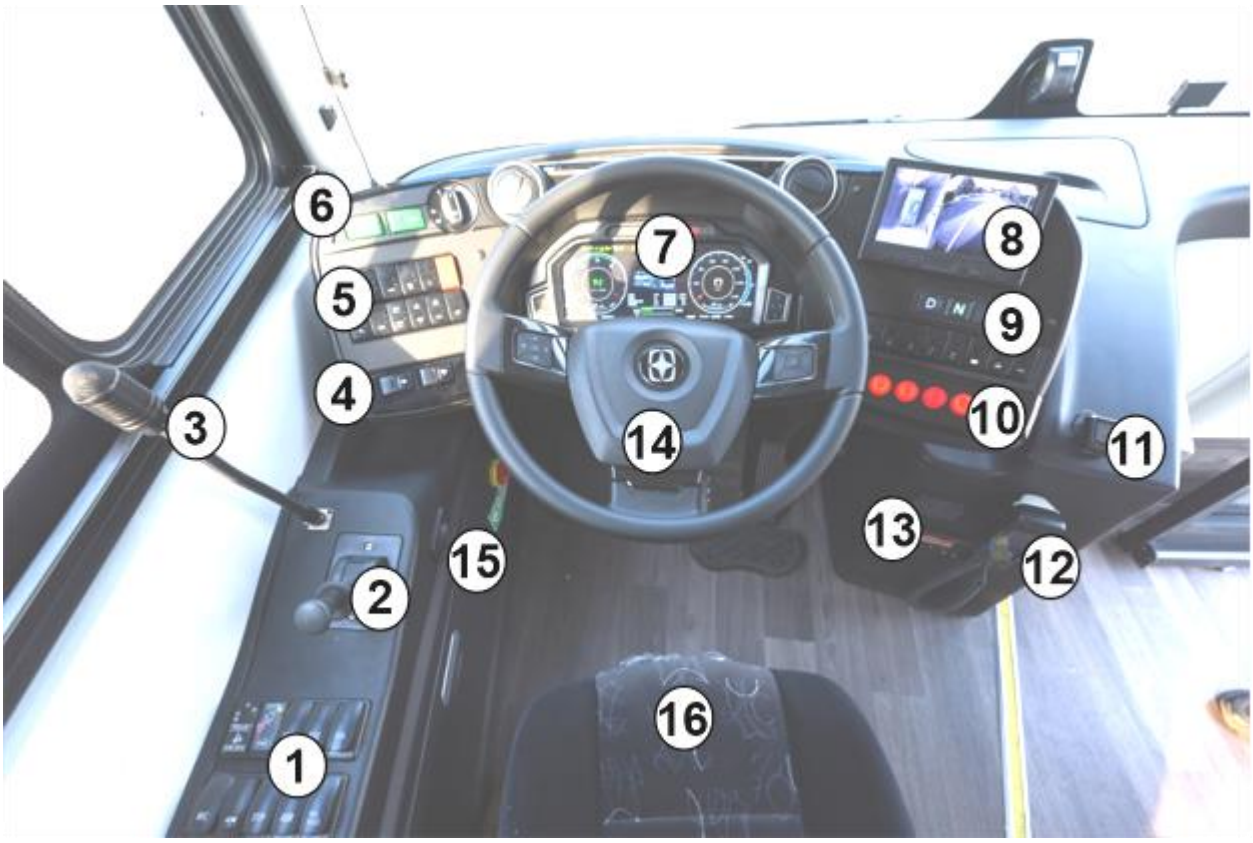

图 11 JS6120GHBEV 车型驾驶区示意图

Figure 11 Schematic diagram of the driving area of JS6120GHBEV model

1. 翘板开关组 Rocker switch group	2. 手制动开关 Hand brake switch	3. 鹅颈话筒 Gooseneck microphone	4. 总线开关 Bus switch	5.总线开关 Bus switch
6.启停开关	7.仪表	8. 监视器	9. 档位开关	10. 门开关

Start stop switch	meter	monitor	Gear switch	Door switch
11. ADAS 显示器 ADAS monitor	12. 酒精互锁操作器 Alcohol interlock operator	13.OBD	14.方向盘 Steering wheel	15. 门放气开关 Door air release switch
16. 驾驶员座椅 16. Driver's seat				

2.2.仪表

2.2. Instruments

2.2.1.仪表盘及按钮说明

2.2.1. Dashboard and Button Description



图 12 仪表示意图

Figure 12 Schematic diagram of the instrument

1.仪表盘及按钮说明主仪表盘及各仪表、指示灯介绍

1. Dashboard and button description: Introduction to the main dashboard, various instruments, and indicator lights

在客车应用中，欧科佳 CAN 总线控制系统主要实现了以下功能：底盘动力总成各部分之间通过 J1939 协议的总线式连接。全车信号的总线式采集和处理。车身和底盘电气负载的控制，如前部组合灯组的控制、后部组合灯组、车辆的启动和熄火以及雨刮器的控制等。车辆运转信息的实时显示，如车速、转速、水温、油压、电压、油量、气压、 电池系统状态、ABS 系统状态的显示等。与 CAN 总线系统相连接的其他设备的工作状态显示。全车与 CAN 总线连接的各总成(包括动力总成)以及电气设备发生故障时的实时报警指示和故障诊断检测信息显示。

In bus applications, the Oukejia CAN bus control system mainly realizes the following functions: the various parts of the chassis powertrain are connected through the J1939 protocol in a bus like manner. Bus based acquisition and processing of all vehicle signals. Control of electrical loads on the body and chassis, such as control of the front combination lights, rear combination lights, vehicle start and stop, and wiper control. Real time display of vehicle operation information, such as vehicle speed, RPM, water temperature, oil pressure, voltage, fuel volume, air pressure, battery system status, ABS system status, etc. Display the working status of other devices connected to the CAN bus system. Real time alarm indication and fault diagnosis detection

information display for all assemblies (including powertrain) and electrical equipment connected to the CAN bus of the entire vehicle in case of malfunction.

2.功能键：用来实现归零单次行驶里程，调节液晶屏视频画面的对比度、亮度、不同信息画面的切换等功能。

2. Function keys: used to reset the single driving mileage, adjust the contrast and brightness of the LCD video screen, and switch between different information screens.

(1)SET 按钮：正常显示画面时，按下此键持续 3 秒钟，可以归零单次行驶里程。设置画面配置完成时，选择到 OK 或 SAVE 菜单，按下此键持续 3 秒钟，可以保持当前设置。

(1) SET button: When the screen is displayed normally, press this button for 3 seconds to reset the single driving mileage. When the screen configuration is complete, select the OK or SAVE menu and press this key for 3 seconds to maintain the current settings.

(2)MENU 按钮：液晶屏显示主界面时，按下此键， 可切换到设置界面选择设置语言、液晶屏亮度、时间、限速值、车速参数及查看仪表软件信息等内容。

(2) MENU button: When the main interface is displayed on the LCD screen, press this button to switch to the settings interface to select settings language, LCD screen brightness, time, speed limit value, vehicle speed parameters, and view instrument software information.

(3)上键按钮 ：液晶屏显示设置界面时，按此键可递增各子菜单数字，对应配置需要的数据。

(3) Up button: When the LCD screen displays the settings interface, press this button to increment the numbers of each submenu, corresponding to the data required for configuration.

(4)下键按钮：液晶屏显示设置界面时，按此键可递减各子菜单数字，对应配置需要的数据 。

(4) Down button: When the LCD screen displays the settings interface, press this button to decrease the number of each sub menu, corresponding to the data required for configuration.

(5)左键按钮 ：按下此键，可以在液晶屏上顺时针切换显示正常显示画面和故障诊断画面。

(5) Left button: Press this button to switch clockwise between displaying the normal display screen and the fault diagnosis screen on the LCD screen.

(6)右键按钮：按下此键，可以在液晶屏上反时针切换显示正常显示画面和故障诊断画面。

(6) Right click button: Press this button to switch counterclockwise between displaying the normal display screen and the fault diagnosis screen on the LCD screen.

2.2.2.仪表指示标识说明

2.2.2. Explanation of Instrument Indication Signs

序号 Serial number	标识 identification	颜色 colour	名称 name	描述 describe
1.		红色 red	手制动状态指示 Hand brake status indication	手刹开关闭合时点亮 Illuminates when the handbrake switch is closed
2.		红色 red	气压低报警指示 Low air pressure alarm indication	气压低时点亮（软件判断或开关接通） Illuminates when the air pressure is low (software judgment or switch on)
3.		绿色 green	前门开指示 Front door open indication	前门开启时点亮（同显示屏的前门开符号片选择使用） Illuminates when the front door is opened (using the same front door open symbol on the display screen)
4.		绿色 green	中门开指示 Middle door opening indication	中门开启时点亮（同显示屏的中门开符号片选择使用） When the middle door is opened, it lights up (the same as the middle door opening symbol on the display screen is selected for use)
5.		红色 red	水温高指示 High water temperature indication	电机电控水温高时点亮，信号来自报文或者采集 When the temperature of the electric motor control water is high, it lights up, and the signal comes from the message or collection
6.		红色 red	后仓门状态指示 Rear compartment door status indication	后仓门打开时点亮 Illuminates when the rear compartment door is opened

序号 Serial number	标识 identification	颜色 colour	名称 name	描述 describe
7.		红色 red	ABS 指示 ABS indication	ABS 开关有效时点亮 Illuminates when ABS switch is active
8.		绿色 green	近光灯指示 Low beam indicator	近光灯开启时点亮 When the low beam is turned on, it lights up
9.		蓝色 blue	远光灯指示 High beam indicator	远光灯开启时点亮 When the high beam is turned on, it lights up
10.		绿色 green	前雾灯指示 Front fog light indicator	前雾灯开启时点亮 When the front fog lights are turned on, they light up
11.		黄色 yellow	后雾灯指示 Rear fog light indicator	后雾灯开启时点亮 When the rear fog lights are turned on, they light up
12.		绿色 green	左转向灯指示 Left turn signal indicator	左转向开关打开时同左转向灯同步点亮 When the left turn switch is turned on, it lights up synchronously with the left turn signal
13.		绿色 green	右转向灯指示 Right turn signal indicator	右转向开关打开时同右转向灯同步点亮 When the right turn switch is turned on, it lights up synchronously with the right turn signal
14.		白色 white	独立水暖油量指示 Independent water and heating oil	符号右边有百分比显示 There is a percentage display on the right side of the symbol

序号 Serial number	标识 identification	颜色 colour	名称 name	描述 describe
			quantity indicator	
15.		绿色 green	整车系统正常指示 Normal indication of the entire vehicle system	车辆处于准备行驶状态 The vehicle is in a ready to drive state
16.		绿色 green	空档 Neutral	档位在空档 The gear is in neutral
17.		绿色 green	前进档 forward gears	档位在前进档 The gear is in forward gear
18.		绿色 green	倒车档 Reverse gear	档位在倒车档 The gear is in reverse gear
19.		绿色 green	电子驻车（临时停车指示灯） Electronic parking (temporary parking indicator light)	档位在驻车档 The gear is in park mode
20.		红色 red	电子驻车故障灯 Electronic parking malfunction light	档位在驻车档 The gear is in park mode
21.		绿色 green	残疾人翻板打开指示 Disabled person flipping board opening instruction	残疾人翻板打开指示 Disabled person flipping board opening instruction
22.		绿色 green	残疾人求助信号指示 Signal indication	残疾人求助信号指示 Signal indication for disabled people seeking help

序号 Serial number	标识 identification	颜色 colour	名称 name	描述 describe
			for disabled people seeking help	
23.		绿色 green	主继电器闭合指示 Main relay closing indication	闭合时显示 Display when closed
24.		黄色 yellow	主继电器断开指示 Main relay disconnection indication	断开时显示 Display when disconnected
25.		黄色 yellow	ABS 故障指示 ABS fault indication	ABS 故障指示 ABS fault indication
26.		黄色 yellow	ASR 故障指示 ASR fault indication	ASR 故障指示 ASR fault indication
27.		蓝色	自动大灯指示	自动大灯开关开启时点亮
28.		黄色 yellow	前门开指示	前门开启时点亮
29.		黄色 yellow	中门开指示	中门开启时点亮
30.		黄色 yellow	后仓门开指示	后仓门打开点亮
31.		黄色 yellow	系统故障指示	系统有故障时点亮
32.		黄色 yellow	限功率指示 Power limit indication	系统限制功率时点亮 Illuminates when the system limits power

序号 Serial number	标识 identification	颜色 colour	名称 name	描述 describe
33.		黄色 yellow	ESC 故障指示 ESC malfunction indication	ESC 故障时点亮 Illuminates when ESC malfunctions
34.		黄色 yellow	充电指示 charge indicator	系统充电时点亮 Illuminates during system charging
35.		红色 red	安全门指示 Safety door indication	安全门打开时点亮 Illuminates when the safety door is opened
36.		红色 red	严重系统故障指示 Serious system malfunction indication	系统严重故障时点亮 Illuminates when the system experiences a serious malfunction
37.		红色 red	充电桩连接指示 Charging pile connection indicator	系统与充电桩连接时点亮 When the system is connected to the charging station, it lights up
38.		红色 red	EBS 严重故障指示	EBS 严重故障时点亮
39.		黄色 yellow	EBS 轻微故障指示	EBS 轻微故障时点亮
40.		红色 red	水位过低指示	水温过低时点亮
41.		红色 red	应急阀打开指示 Emergency valve opening indication	应急阀打开时点亮 When the emergency valve is opened, it lights up
42.		红色 red	火灾报警指示 Fire alarm	火灾报警时点亮 Illuminates during fire alarm

序号 Serial number	标识 identification	颜色 colour	名称 name	描述 describe
			indication	
43.		绿色 green	侧跪指示 Side kneeling instruction	ECAS(ELC)侧倾时点亮 Illuminates when ECAS (ELC) tilts
44.		绿色 green	小灯指示 Small light indicator	小灯工作时点亮 When the small light is working, it lights up
45.		红色 red	烟雾报警指示 Smoke alarm indication	烟雾报警时点亮 Illuminates during smoke alarm
46.		红色 red	风扇故障指示 Fan malfunction indication	风扇故障时点亮 Illuminates when the fan malfunctions
47.		红色 red	安全带未系指示 Seat belt not fastened indication	1、安全带、驾驶员离座开关同时有效，车速大于 5km/h，安全带未扣报警指示灯亮，蜂鸣器以 1hz 频率常响； 2、安全带、驾驶员离座开关同时有效，车速小于等于 5km/h，安全带未扣报警指示灯亮，蜂鸣器不响； 3、驾驶员离座，整车有高压信号（READY 有效），司机离座高压未断报警指示灯亮，蜂鸣器以 1hz 频率常响。 1. The seat belt and driver's seat departure switch are both effective. When the vehicle speed is greater than 5km/h, the seat belt unfastened alarm indicator light will be on, and the buzzer will sound continuously at a frequency of 1Hz; 2. The seat belt and driver's seat departure switch are both effective. If the vehicle speed is less than or equal to 5km/h, the seat belt unfastened alarm
48.		红色 red	驾驶员离座指示 Driver Off Seat Indication	

序号 Serial number	标识 identification	颜色 colour	名称 name	描述 describe
				indicator light will be on and the buzzer will not sound; 3. When the driver leaves the seat, there is a high voltage signal (READY is valid) in the entire vehicle. The high voltage warning indicator light is on when the driver leaves the seat, and the buzzer sounds continuously at a frequency of 1 Hz.
49.		红色 red	制动指示 Brake indication	制动时点亮 Illuminates during braking
50.		红色 red	气压低指示 Low pressure indication	气压低时点亮 Illuminates when the air pressure is low
51.		红色 red	驻车制动指示 Parking brake indicator	驻车时点亮 Illuminates when parked
52.		红色 red	油泵过温指示 Oil pump over temperature indication	油泵过温时点亮 Lights up when the oil pump is overheated
53.		红色 red	气泵过温指示 Air pump over temperature indication	气泵过温时点亮 When the air pump is overheated, it lights up
54.		绿色 green	显示后移指示 Display backward indication	当显示屏出现此标识时，可以通过仪表下翻按钮查看下一页的指示标识（需要在显示屏主界面时才能操作） When this symbol appears on the display screen, the next page's indicator symbol

序号 Serial number	标识 identification	颜色 colour	名称 name	描述 describe
				can be viewed through the instrument panel's scroll down button (it needs to be operated on the main interface of the display screen)
55.		绿色 green	显示前移指示 Display forward indication	当显示屏出现此标识时，可以通过仪表上翻按钮查看上一页的指示标识（需要在显示屏主界面时才能操作） When this symbol appears on the display screen, you can view the previous page's indicator symbol through the instrument panel up button (it needs to be operated on the main interface of the display screen)
56.		绿色 green	显示前移或后移指示 Display forward or backward indication	当显示屏出现此标识时，可以通过仪表上翻按钮或上翻按钮查看上一页或下一页的指示标识（需要在显示屏主界面时才能操作） When this indicator appears on the display screen, the previous or next page's indication can be viewed through the up or down button on the instrument panel (it needs to be operated on the main interface of the display screen)
57.		黄色 yellow	FCW 碰撞预警关闭指示灯 FCW collision warning off indicator light	FCW 碰撞预警功能关闭，指示灯亮 FCW collision warning function is turned off, indicator light is on

序号 Serial number	标识 identification	颜色 colour	名称 name	描述 describe
58.		黄色 yellow	LDW 车道偏离关闭指示灯 Yellow LDW lane departure off indicator light	LDW 车道偏离功能关闭，指示灯亮 LDW lane departure function is turned off, indicator light is on
59.		黄色 yellow	FCW 碰撞预警故障 FCW collision warning malfunction	FCW 碰撞预警故障，指示灯亮 FCW collision warning fault, indicator light on
60.		黄色 yellow	LDW 车道偏离故障 LDW lane departure fault	LDW 车道偏离故障，指示灯亮 LDW lane departure fault, indicator light on
61.		黄色 yellow	一级碰撞预警	车辆一级碰撞预警 行人一级碰撞预警 Vehicle Level 1 Collision Warning Pedestrian Level 1 Collision Warning
62.	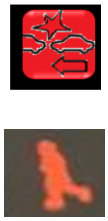	红色 red	二级碰撞预警 Level 2 collision warning	车辆二级碰撞预警 行人二级碰撞预警 Vehicle Level 2 Collision Warning Pedestrian Level 2 Collision Warning
63.		黄色 yellow	右车道偏离预警 Right lane departure warning	右车道偏离，预警指示灯亮 Right lane departure, warning indicator light on
64.		黄色 yellow	左车道偏离预警 Left lane departure	左车道偏离，预警指示灯亮 Left lane departure, warning indicator

序号 Serial number	标识 identification	颜色 colour	名称 name	描述 describe
			warning	light on
65.		黄 色 yellow	ASR 功能关闭指示灯 ASR function off indicator light	ASR 开关接通，ASR 功能关闭，指示灯常亮 ASR switch is turned on, ASR function is turned off, and the indicator light remains on
66.		黑白 black and white	电瓶电压 Battery voltage	16-32V
67.		红 色 red	酒精互锁 Alcohol interlock	显示需要检测 Display requires detection
68.		红 色 red	停车 parking	ON— 前气压传感器<600Kpa 且 READY 指示 ON ON— 后气压传感器<600Kpa 且 READY 指示 ON ON - Front air pressure sensor<600Kpa and READY indicates ON ON - Rear air pressure sensor<600Kpa and READY indicates ON
69.		黄 色 yellow	残疾人轮椅打开 Disabled wheelchair open	ON-残疾人踏板伸出 OFF ON - Disabled pedal extended OFF
70.		黄 色 yellow	LDW 系统故障指示 LDW system fault indication	ON-开机自检 5s ON Power on self-test for 5 seconds

序号 Serial number	标识 identification	颜色 colour	名称 name	描述 describe
71.		黄 色 yellow	蹄片报警 Hoof alarm	左右前后蹄片报警 Left and right front and rear hoof plate alarm
72.		黄 色 yellow	限功率 Power limit	
73.		黄 色 yellow	低速蜂鸣禁止提示 Low speed buzzing prohibition prompt	ON，OFF
74.		黄 色 yellow	ECAS(ELC) 警 告 指示 ECAS (ELC) warning indication	
75.		红 色 red	ECAS(ELC) 故 障 指示 ECAS (ELC) fault indication	
76.		绿 色 green	ECAS(ELC) 侧 倾 指示 ECAS (ELC) roll indication	
77.		黄 色 yellow	ECAS(ELC) 高 度 指示灯 ECAS (ELC) height indicator light	
78.		黄 色 yellow	充电舱门开指示 Charging door open indication	

序号 Serial number	标识 identification	颜色 colour	名称 name	描述 describe
79.		绿 色 green	坡道起步辅助 Hill start assist	功能开启 Function enabled
80.		白色 white	坡道起步辅助 Hill start assist	激活 activation
81.		红 色 red	门开制动指示 Door open brake indicator	开启 open
82.		白色	门开制动激活 Door opening brake activated	激活 activation
83.		绿 色 green	Auto Hold 指示 Auto Hold indication	
84.		红 色 red	Auto Hold 故障 Auto Hold malfunction	
85.		黄 色 yellow	胎压报警指示 Tire pressure warning indication	
86.		绿 色 green	一档电制动 First gear electric brake	
87.		绿 色 green	二档电制动 Second gear electric brake	
88.		绿 色 green	三档电制动 Three speed electric	

序号 Serial number	标识 identification	颜色 colour	名称 name	描述 describe
			brake	
89.		绿 色 green	四档电制动 Four speed electric brake	
90.		绿 色 green	五档电制动 Five speed electric brake	
91.		红 色 red	暖风水位报警指示 Warm air water level alarm indication	
92.		黄 色 yellow	DDAW-7 级预警 DDAW-7 level warning	闪烁 twinkle
93.		红 色 red	DDAW-8 级预警 DDAW-8 level warning	闪烁 twinkle
94.		红 色 red	DDAW-9 级预警 DDAW-9 level warning	闪烁 twinkle
95.		黄 色 yellow	DDAW 报警声音取消 DDAW alarm sound cancelled	ON
96.		黄 色 yellow	DDAW 故障指示 DDAW fault indication	ON

序号 Serial number	标识 identification	颜色 colour	名称 name	描述 describe
97.		黄 色 yellow	MOIS 系统故障指示 MOIS system fault indication	行驶区域信息提示系统 Driving area information prompt system
98.		黄 色 yellow	ISA 系统故障指示 ISA system fault indication	智能车速辅助系统 Intelligent speed assistance system
99.		黄 色 yellow	BSIS 系统故障指示 BSIS system fault indication	盲点信息提示系统 Blind spot information prompt system

2.2.3.仪表显示界面说明

2.2.3. Description of Instrument Display Interface

彩色 TFT 液晶显示屏

Color TFT LCD display screen

彩色 TFT 液晶显示屏在正常状态下可用于显示文字报警信息、符号片、柱状表（通常为气压）、里程信息以及一些其他特殊内容（视车辆配置而定）。

The color TFT LCD display can be used to display text alarm information, symbol plates, bar gauges (usually air pressure), mileage information, and some other special content (depending on the vehicle configuration) under normal conditions.



图 13 仪表显示界面示意图

Figure 13 Schematic diagram of instrument display interface

长按 MENU 菜单功能按钮可将屏幕切换至设置界面、故障诊断画面及一些特殊页面（视车辆配置而定）。

Long press the MENU menu function button to switch the screen to the settings interface, fault diagnosis screen, and some special pages (depending on the vehicle configuration).

1、设置界面

1. Settings interface

MENU 键选择对应菜单，上下键设置选定菜单的配置状态，选中 OK 或 Save 菜单后长按 SET 键可保持设置的当前状态

The MENU key selects the corresponding menu, the up and down keys set the configuration status of the selected menu, and after selecting the OK or Save menu, long press the SET key to maintain the current state of the settings



图 14 仪表设置界面示意图

Figure 14 Schematic diagram of instrument setting interface

仪表及模块的管脚配置界面（可显示具体信号输入输出状态：如连接，短路，断路等）

Pin configuration interface for instruments and modules (can display specific signal input and output status such as connection, short circuit, open circuit, etc.)

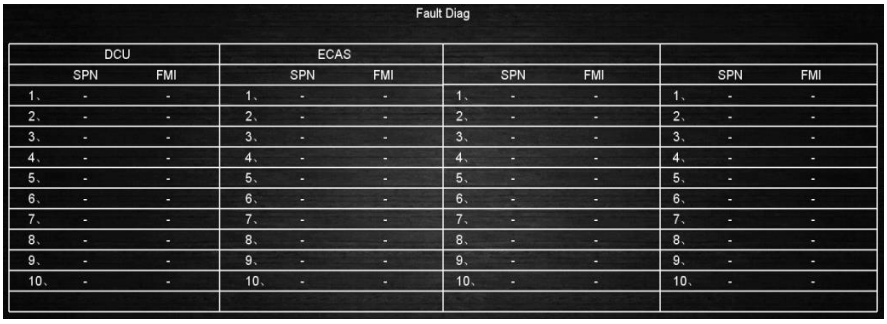

图 15 诊断界面示意图

Figure 15 Schematic diagram of diagnostic interface

VCU、ABS/EBS、ECAS(ELC)　SPN FMI 诊断界面

VCU、ABS/EBS、ECAS（ELC）SPN-FMI Diagnostic interface

其它配置界面

Other configuration interfaces

2、具体操作方式：

2. Specific operation method:

(1)开机后在主界面菜单中按下菜单键，即弹出选择界面，调节“左键”按钮和调节“右键”按钮，切换到所需子界面中。

(2)在子界面菜单中，通过“MENU”按钮选择光标移动到所需菜单栏，在光标停留的菜单栏，调节“上键”按钮和调节“下键”按钮，实现菜单参数的调整。

(3)在设置画面时，按下 SET 按钮 3 秒钟，可以保存当前设置信息。

(4)常按菜单功能键可将屏幕切换回正常页面。

(1) After booting up, press the menu button in the main interface menu to pop up the selection interface. Adjust the "left button" and "right button" to switch to the desired sub interface.

(2) In the sub interface menu, use the "MENU" button to select the cursor and move it to the desired menu bar. In the menu bar where the cursor stays, adjust the "up" and "down" buttons to adjust the menu parameters.

(3) When setting up the screen, press the SET button for 3 seconds to save the current setting information.

(4) Press the menu function key frequently to switch the screen back to the normal page.

⚠注意

重要说明：

- 出于安全考虑，TFT 屏中的后仓门指示处于开启状态时，无法进入驱动模式；
- 根据汽车电子行业的要求，总线仪表的工作温度，有明确的定义：

工作温度：-30℃～65℃

存储温度：-30℃～85℃.

在-30℃以下高寒地区，清晨出车前，请车辆维护人员安排预热总线仪表工作温度至-30℃附近，具体时间根据当地温度决定，建议：

-50℃以下时把钥匙打到 ACC 或者 ON 档预热 30 分钟；

-40℃以下时把钥匙打到 ACC 或者 ON 档预热 20 分钟；

-30℃以下时把钥匙打到 ACC 或者 ON 档预热 10 分钟。

实际预热时间以仪表显示屏正常工作为准。

⚠注意

Important note:

For safety reasons, when the rear compartment door indicator in the TFT screen is in the open state, it cannot enter the driving mode;

According to the requirements of the automotive electronics industry, there is a clear definition for the operating temperature of bus instruments:

Working temperature: -30 ℃~65 ℃

Storage temperature: -30 ℃~85 ℃

In high-altitude areas below -30 ℃, before driving in the morning, please arrange for the vehicle maintenance personnel to preheat the working temperature of the bus instrument to around -30 ℃. The specific time depends on the local temperature. It is recommended to:

-When the temperature is below 50 ℃, turn the key to ACC or ON and preheat for 30 minutes;

-When the temperature is below 40 ℃, turn the key to ACC or ON and preheat for 20 minutes;

-When the temperature is below 30 ℃, turn the key to ACC or ON and preheat for 10 minutes.

The actual preheating time is subject to the normal operation of the instrument display screen.

常见 LED 符号片显示

名 称	LED 符号片	定 义
前雾灯符号片 Low eam light WL		ON —前雾灯 ON ON —Front fog light is ON
后雾灯符号片 Front Fog Light WL		ON — 后前雾灯 ON ON — rear front fog light is ON
左转向灯符号片 Turn Left WL		ON — 左转向灯 ON ON — left turn signal ON
驻车符号片 Parking WL		ON — 手刹开关 ON ON — handbrake switch ON
气压报警符号片 Air pressure WL		ON — 气压 1 报警 ON ON — Air pressure 1 alarm ON ON — 气压 2 报警 ON ON — Air pressure 2 alarm ON
电机水位低报警 Low Coolant Level		ON — 电机水位报警 ON ON — motor water level alarm is ON

名 称	LED 符号片	定 义
停车灯 Stop		ON - 气压 1<550Kpa 且 READY 指示 ON ON-Air pressure 1 <550Kpa and READY indication ON ON - 气压 2<550Kpa 且 READY 指示 ON ON-Air pressure 2 <550Kpa and READY indicator ON ON — 水箱水位低报警 ON ON — low water tank alarm ON
远光灯符号片 High Beam WL		ON —远光灯 ON ON — high beam light ON
近光灯符号片 Low Beam light WL		ON —近光灯 ON ON — low beam ON
右转向灯符号片 Turn Right WL		ON — 右转向灯 ON ON — right turn signal ON

3、总线系统平时的维护及注意事项:

3. Routine maintenance and precautions for bus system:

(1)严格按照操作步骤进行系统启动，先开总电源再开钥匙附件档，最后启动车辆。

(2)严格按照操作步骤进行系统关闭，先熄火再关钥匙附件档，最后关闭总电源。

(3)平时使用时，注意仪表及模块的清洁。

(4)禁止用水冲洗 CAN 系统模块及仪表。

(5)在更换系统部件及电焊加装时，断掉系统电源，将模块供电插脚拔下。

(1) Strictly follow the operating steps to start the system, first turn on the main power, then turn on the key accessory gear, and finally start the vehicle.

(2) Strictly follow the operating steps to shut down the system, turn off the engine first, then turn off the key accessory file, and finally turn off the main power.

(3) Pay attention to the cleanliness of instruments and modules during normal use.

(4) Do not rinse CAN system modules and instruments with water.

(5) When replacing system components and welding installations, disconnect the system power supply and unplug the module power supply pins.

序号	名称 Name	颜色 Color	图案 Graphic pattern
1	左转向 Left turn	绿 green	
2	右转向 Right turn	绿 green	
3	远光灯 high-beam lamp	蓝 blue	

序号	名称 Name	颜色 Color	图案 Graphic pattern
4	近光灯 low-beam lamp	绿 green	
5	前雾灯 Front frog lamp	绿 green	
6	后雾灯 Rear frog lamp	黄 yellow	
7	后仓门开指示 Rearcabindoor open	黄 yellow	
8	充电指示 Charging indicator	黄 yellow	
9	系统故障指示 System fault	红 red	
10	充电连接指示 Charging connection	红 red	
11	冷却液低报警指示灯 Low level of coolant	红 red	
12	电池电压报警指示 Battery voltage alarm	红 red	
13	气压低报警指示 Low pressure warning	红 red	
14	ABS 报警指示 ABS warning light	黄 yellow	
15	动力蓄电池断开指示 battery disconnection	黄 yellow	
16	驻车指示 Park indicator	红 red	
17	停车指示 Stop indicator	红 red	

2.3.部件操作

2.3. Component Operation

2.3.1.电源、启动、熄火开关

2.3.1. Power, Start, and Stop Switches

ACC 开关位于仪表台左侧，其工作档位和分断能力如下：

The ACC switch is located on the left side of the dashboard, with the following operating gears and breaking capabilities:



图 16 电源开关示意图



图 17 启动和熄火开关示意图

Figure 16 Schematic diagram of power switch Figure 17 Schematic diagram of start and stop switches

按下电源开关，电源接通。

Press the power switch to turn on the power.

启动开关按下，接通 ON 档，踩住制动，接可上高压；按住熄火开关，全车下高压。

Press the start switch, turn on the ON gear, press and hold the brake, and connect the high voltage; Press and hold the ignition switch to activate high voltage throughout the vehicle.

⚠注意
请根据车辆配置选用。 Please select according to the vehicle configuration.

2.3.2.组合开关

2.3.2. Combination switch

1. 组成

1. Composition

组合开关的操纵杆、旋钮及其按钮位于方向盘下方，该开关由灯光开关、转向、雨刮、洗涤器及缓速器开关等组成。

The control lever, knob, and buttons of the combination switch are located below the steering wheel. The switch consists of a light switch, steering, wiper, washer, and retarder switch.

2. 左侧组合开关

2. Left combination switch



图 18 左侧组合开关示意图

Figure 18 Schematic diagram of left combination switch

该操纵杆是由转向信号开关、灯光开关（包括前照灯、超车灯、及变光开关）、雨刮及洗涤开关组成。

The joystick consists of a turn signal switch, light switches (including headlights, overtaking lights, and dimmer switches), wiper and wash switches.

3. 手动缓速器开关

3. Manual retarder switch



图 19 手动缓速器开关

Figure 19 Manual retarder switch

警告
在冰冻气候条件下，开车前，应确保雨刮器没有被冻结在前风窗玻璃上。 Before driving in freezing weather conditions, make sure that the windshield wipers are not frozen on the windshield.

2.3.3.档位器

2.3.3. Gear shifter



图 20 档位器面板 1

Figure 20 Gear shifter panel 1



图 21 档位器面板 2

Figure 21 Gear shifter panel 2



图 22 档位器面板 3

Figure 22 Gear shifter panel 3



图 23 档位器面板 4

Figure 23 Gear shifter panel 4

1. 档位器按键功能说明

1. Function description of gear shifter button

(1)**D 前进档**：按下该按钮后踩油门，整车将前进，最高车速不超过 70km/h。车速或转　矩随油门的开度的增大而增大。

(2)**N 空挡**：复位功能，前进与倒车档位切换，需经过 N 档。

(3)**R 倒车档**：按下该按钮后踩油门，整车将后退，最高车速不超过 15km/h。

(4)**S 预留键**：暂时不用。

(5)**eP 按钮**：电子驻车开关。

(1) Drive mode D: Press this button and press the accelerator to move the vehicle forward, with a maximum speed not exceeding 70km/h. The speed or torque increases with the increase of throttle opening.

(2) N Neutral: Reset function, switching between forward and reverse gears requires passing through N gear.

(3) Reverse gear: Press this button and press the accelerator to reverse the vehicle, with a maximum speed not exceeding 15km/h.

(4) S reserved key: Not needed temporarily.

(5) EP button: electronic parking switch.

警告

禁止行车中非紧急情况下，按下 eP 按键或拉上电子驻车开关，该功能仅用于驻车/紧急制动的激活和解除。

驾驶员离开座椅时，应拉上手刹，挂空档 N。

严禁开门行车，设有“车门互锁”功能车辆，打开司机左侧的仪表台检修口内的应急开关可解除禁行，该功能仅用于紧急情况，正常营运严禁使用。。

坡道驻车起步时，禁止松手刹和解除 eP 时深踩油门，避免加速过快造成完全事故。

车辆行驶中禁止切换档位，禁止踩油门挂档。

车辆自身不会自动加速行驶，如果出现行车失控，应立即松开油门，迅速踩下制动踏板，可同时拉上手刹，车辆会快速停住。

It is prohibited to press the eP button or pull up the electronic parking switch during driving in non emergency situations. This function is only used for activating and releasing parking/emergency braking.

When the driver leaves the seat, the handbrake should be pulled and neutral N should be engaged.

It is strictly prohibited to drive with the door open. Vehicles equipped with a "door interlock" function can lift the ban by opening the emergency switch in the dashboard inspection port on the driver's left side. This function is only used in emergency situations and is strictly prohibited for normal operation..

When parking and starting on a slope, it is forbidden to release the handbrake or press the accelerator pedal deeply when releasing the eP to avoid accelerating too quickly and causing a complete accident.

It is prohibited to shift gears or press the accelerator to shift gears while the vehicle is in motion.

The vehicle itself will not automatically accelerate. If there is a loss of control, the accelerator should be released immediately, the brake pedal should be quickly pressed, and the handbrake can be pulled at the same time to quickly stop the vehicle.

2. 换档操作及注意事项

2. Shift operation and precautions

车辆初始上电后默认档位为空档 N（该车档位器必须在钥匙 START 档启动后操作有效），驾驶员必须确认挂入正确档位后再加油行驶，挂入对应档位后仪表盘上将显示对应指示灯。当对应档位按键激活时，按键灯会亮起，直到解除熄灭。

After the initial power on of the vehicle, the default gear is neutral N (the gear shifter must be operated effectively after the key START is turned on). The driver must confirm that the correct gear is engaged before refueling and driving. After shifting to the corresponding gear, the corresponding indicator light will be

displayed on the dashboard. When the corresponding gear button is activated, the button light will light up until it is released and turned off.

3. 换档操作流程如下：

3. The gear shifting operation process is as follows:

(1)档位器上电初始档位为空档“N”。

(2)车辆由空档“N”切换进前进档“D”或倒车档“R”时，需踩住刹车，且车速为零时可挂入。

(3)当车辆处于前进档“D”或倒车档“R”，需要切换到空档“N”时，必须踩刹车，按空档“N”按键即可完成操作。

(4)档位器“D”档或“R”档之间不可直接切换，必须踩刹车，经过“N”档。

(5)车辆前进档最高车速不超过 70km/h，倒车档最高车速不超过 15km/h。

(1) The initial gear of the gear shifter when powered on is neutral "N".

(2) When the vehicle switches from neutral gear "N" to forward gear "D" or reverse gear "R", the brake must be applied and the vehicle can be engaged when the speed is zero.

(3) When the vehicle is in forward gear "D" or reverse gear "R" and needs to switch to neutral gear "N", the brake must be applied and the neutral gear "N" button pressed to complete the operation.

(4) The gear shifter cannot be directly switched between "D" or "R" gears, and the brake must be applied to pass through "N" gear.

(5) The maximum speed of the vehicle in forward gear shall not exceed 70km/h, and the maximum speed in reverse gear shall not exceed 15km/h.

⚠警告

●档位器必须按规定流程操作，否则会有安全风险。

档位器故障时严禁行车，应立即维修处理。

驾驶过程中因不规范操作引起报警（非一直存在故障）时，可通过重启系统（先关闭钥匙再关手闸开关）解除。

重启系统时应按规范停车，将钥匙开关拨回到 OFF 档，等待仪表盘关闭。再等待 10 秒以上，按规范起动车辆。

出现非操作引起的报警故障，或重启系统故障依然存在时，请及时与我司售后人员联系。

驾驶员应保持平稳驾驶习惯，不宜急加速、急减速，刹车减速时尽可能利用电动刹车，不使气动刹车工作（有利于制动能量回收，提高续驶里程。**注：如遇紧急情况除外**）。

The gear shifter must be operated according to the prescribed procedures, otherwise there may be safety

警告

risks.

When the gear shifter malfunctions, it is strictly prohibited to drive and should be repaired and dealt with immediately.

When an alarm is triggered during driving due to improper operation (not a persistent fault), it can be resolved by restarting the system (turning off the key first and then the handbrake switch).

When restarting the system, park according to the specifications, turn the key switch back to OFF, and wait for the dashboard to turn off. Wait for more than 10 seconds and start the vehicle according to the specifications.

If there is an alarm fault caused by non operation, or if the system fault still exists after restarting, please contact our after-sales personnel in a timely manner.

Drivers should maintain a stable driving habit and avoid sudden acceleration or deceleration. When braking or decelerating, electric brakes should be used as much as possible to prevent pneumatic brakes from working (which is beneficial for braking energy recovery and improving driving range. **Note: except in emergency situations**).

2.3.4.电喇叭

2.3.4. Electric horn



图 24 喇叭开关（具体附带功能见实车）

Figure 24 Horn switch (see actual vehicle for specific additional functions)

2.3.5.驻车开关

2.3.5. Parking switch



图 25 手刹开关示意图



图 26 手刹开关操作示意图

Figure 25 Schematic diagram of handbrake switch Figure 26 Schematic diagram of handbrake switch operation

该制动手柄开关为传统气动手刹控制阀，手柄向后推为手刹驻车状态。解除手刹时将手柄先向上提，然后向前推解除手刹状态。

The brake lever switch is a traditional pneumatic handbrake control valve, and pushing the lever backward indicates the handbrake parking state. When releasing the handbrake, first lift the handle upwards and then push it forward to release the handbrake state.

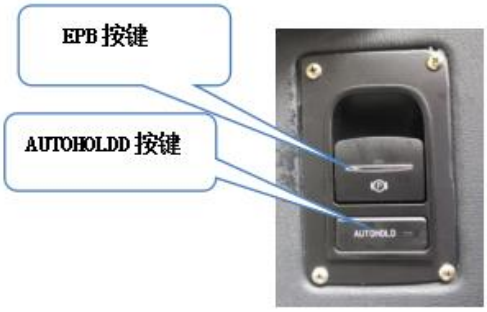

图 27 EPB 电子驻车开关（选装）

Figure 27 EPB electronic parking switch (optional)

当车辆配置电子驻车时，仪表台设置EPB电子驻车操作按键，上拉按键时激活电子驻车，按键灯会亮起，同时仪表盘亮起“”指示灯。激活状态下，下按EPB按键时解除电子驻车，此时按键灯熄灭，仪表盘指示灯熄灭。当电子驻车有故障时，仪表会显示“”指示灯，此时应检查维修。

车辆气压低压报警时如果触动 EPB 按钮释放驻车，驻车将禁止释放，仪表显示“气压过低”并有声音报警提示。（低压释放限制功能是当车辆气压过低时限制释放驻车制动，等待气压恢复正常时才能释放，如需强制释放驻车，需踩住脚刹并长按 EPB 按钮 5 秒）。

AUTOHOLD按键为自动驻车按键，当激活该按键时，按键灯点亮，启动自动驻车功能。解除时再次按下按键，按键灯熄灭，将解除自动驻车功能。该功能为行车状态下使用，自动驻车功能激活状态下通过踩制动踏板进入驻车制动，通过踩油门踏板加速释放驻车制动。

When the vehicle is configured with electronic parking, the dashboard is equipped with EPB electronic parking operation buttons. When the button is pulled up, the electronic parking is activated, and the button light

will turn on. At the same time, the dashboard will light up the "" indicator light. When activated, press the EPB button to release the electronic parking. At this time, the button light will turn off and the dashboard indicator light will turn off. When there is a malfunction in the electronic parking system, the instrument panel will display the "" indicator light, and it should be checked and repaired at this time.

When the vehicle's air pressure low pressure alarm is triggered, if the EPB button is pressed to release the parking, the parking will be prohibited from being released, and the instrument panel will display "low air pressure" with an audible alarm prompt. The low-pressure release restriction function restricts the release of the parking brake when the vehicle air pressure is too low, and can only be released when the air pressure returns to normal. To forcefully release the parking brake, press and hold the foot brake and press the EPB button for 5 seconds.

The AUTOHOLD button is an automatic parking button. When this button is activated, the button light will turn on, activating the automatic parking function. Press the button again when releasing, the button light will turn off, and the automatic parking function will be released. This function is used while driving. When the automatic parking function is activated, the parking brake is applied by pressing the brake pedal, and the parking brake is released by accelerating with the accelerator pedal.

⚠警告

●当车辆处于电子手刹驻车制动状态时严禁踩油门行车，应按规范解除驻车制动后行车。

●严禁用 AUTOHOLD 功能替代手刹功能驻车，将会有安全危险。

●When the vehicle is in the electronic handbrake parking brake state, it is strictly prohibited to press the accelerator while driving. The parking brake should be released according to regulations before driving.

●It is strictly prohibited to use AUTOHOLD function instead of handbrake function for parking, as it may pose a safety hazard.

2.3.6.车辆 OBD 接口

2.3.6. Vehicle OBD interface

车辆配置 OBD 诊断口，位置在车辆仪表台上（不同车型位置会有所不同），该诊断口集成整车 CAN、驱动 CAN、充电 CAN 和仪表 CAN，设有 24V 常电电源，方便数据采集和系统维护。

The vehicle is equipped with an OBD diagnostic port located on the dashboard (the position may vary depending on the vehicle model). This diagnostic port integrates the vehicle CAN, drive CAN, charging

CAN, and instrument CAN, and is equipped with a 24V constant power supply for easy data acquisition and system maintenance.

1. 外观及端口

1. Appearance and ports



图 28 OBD 接口示意图



图 29 OBD 接口示意图

Figure 28 Schematic diagram of OBD interface Figure 29 Schematic diagram of OBD interface

2. 接口定义

2. Interface definition



图 30 OBD 接口示意图

Figure 30 Schematic diagram of OBD interface

2.3.7.车外后视镜开关（选装）

2.3.7. Exterior rearview mirror switch (optional)

车外后视镜有两种形式：手动式和电动式，请注意您的车辆配置。

手动式操作方法：用手转动后视镜镜面，直至在驾驶员座位上获得理想的后视效果。

电动式操作方法：将后视镜开关旋转到“L”/“R”位置，然后按（上-下-左-右）按钮进行角度调整，直至在驾驶员座位上获得理想的后视效果。

There are two forms of exterior rearview mirrors: manual and electric. Please pay attention to your vehicle's

configuration.

Manual operation method: Rotate the rearview mirror surface by hand until the desired rearview effect is achieved in the driver's seat.

Electric operation method: Rotate the rearview mirror switch to the "L"/"R" position, and then press the (up down left right) button to adjust the angle until the desired rearview effect is obtained in the driver's seat.



图 31 电动后视镜开关

Figure 31 Electric rearview mirror switch

电动外后视镜除霜雾：通过操作仪表台上带“”标识翘板开关实现开启、关闭，正常情况下不应开启该功能。

Electric exterior rearview mirror defrosting: It can be turned on and off by operating the rocker switch with the "" symbol on the dashboard. Under normal circumstances, this function should not be turned on.

2.3.8.近光灯调节开关（选装）

2.3.8. Low beam adjustment switch (optional)



图 32近光灯调节开关示意图

Figure 32 Schematic diagram of low beam adjustment switch

近光灯高度调节开关，安装于仪表台上，通过滚轮上下滚动调节灯光高低。向上滚动数字变大时灯光调高，反之，灯光调低。请根据需要调节到合适位置，避免灯光高度不合适引起驾驶安全。

The low beam height adjustment switch is installed on the dashboard and adjusts the light height by rolling up and down with a scroll wheel. When scrolling up the numbers, the light will increase; otherwise, the

light will decrease. Please adjust to the appropriate position as needed to avoid driving safety caused by inappropriate lighting height.

2.3.9.翘板开关

2.3.9. Rocker switch



图 33 仪表台部分开关示意图

Figure 33 Schematic diagram of some switches on the dashboard

开关的设置可能因车型的不同而有所增减，设置位置也不同，请根据实际车辆的配置情况，参照下面正确使用：

The setting of the switch may vary depending on the vehicle model, and the setting position may also be different. Please refer to the following for correct use based on the actual configuration of the vehicle:

图识开关的设置可能因车型而异，设置位置也可能不同。请根据车辆的实际配置参考以下正确使用方法：The setting of the image recognition switch may vary depending on the vehicle model, and the setting position may also be different. Please refer to the following correct usage methods based on the actual configuration of the vehicle:	名称 name	翘板开关含义 Meaning of rocker switch	图识 Image recognition	名称 name	翘板开关含义 Meaning of rocker switch
	电视 1 TV 1	单档：用于车前电视。 Single mode: used for front		电视 2 TV 2	单档：用于车后电视。 Single mode: used for the rear

图识开关的设置可能因车型而异，设置位置也可能不同。请根据车辆的实际配置参考以下正确使用方法：The setting of the image recognition switch may vary depending on the vehicle model, and the setting position may also be different. Please refer to the following correct usage methods based on the actual configuration of the vehicle:	名称 name	翘板开关含义 Meaning of rocker switch	图识 Image recognition	名称 name	翘板开关含义 Meaning of rocker switch
		TV.			TV of the car.

图识开关的设置可能因车型而异，设置位置也可能不同。请根据车辆的实际配置参考以下正确使用方法：The setting of the image recognition switch may vary depending on the vehicle model, and the setting position may also be different. Please refer to the following correct usage methods based on the actual configuration of the vehicle:	名称 name	翘板开关含义 Meaning of rocker switch	图识 Image recognition	名称 name	翘板开关含义 Meaning of rocker switch
	危险告警开关 Danger alarm switch	单档：用于紧急情况，同时开启左右两侧转向灯的开启		路牌开关 Road sign switch	单档：用于打开和关闭前、后、侧路牌以及车内滚动屏。

图识开关的设置可能因车型而异，设置位置也可能不同。请根据车辆的实际配置参考以下正确使用方法：The setting of the image recognition switch may vary depending on the vehicle model, and the setting position may also be different. Please refer to the following correct usage methods based on the actual configuration of the vehicle:	名称 name	翘板开关含义 Meaning of rocker switch	图识 Image recognition	名称 name	翘板开关含义 Meaning of rocker switch
		和关闭，起到警示的作用。Single gear: Used for			Single gear: used to turn on and off front, rear, side road signs, as

图识开关的设置可能因车型而异，设置位置也可能不同。请根据车辆的实际配置参考以下正确使用方法：The setting of the image recognition switch may vary depending on the vehicle model, and the setting position may also be different. Please refer to the following correct usage methods based on the actual configuration of the vehicle:	名称 name	翘板开关含义 Meaning of rocker switch	图识 Image recognition	名称 name	翘板开关含义 Meaning of rocker switch
		emergency situations, it simultaneously turns on and off			well as the in car scrolling screen.

图识开关的设置可能因车型而异，设置位置也可能不同。请根据车辆的实际配置参考以下正确使用方法：The setting of the image recognition switch may vary depending on the vehicle model, and the setting position may also be different. Please refer to the following correct usage methods based on the actual configuration of the vehicle:	名称 name	翘板开关含义 Meaning of rocker switch	图识 Image recognition	名称 name	翘板开关含义 Meaning of rocker switch
		the left and right turn signals to serve as a warning.			

图识开关的设置可能因车型而异，设置位置也可能不同。请根据车辆的实际配置参考以下正确使用方法：The setting of the image recognition switch may vary depending on the vehicle model, and the setting position may also be different. Please refer to the following correct usage methods based on the actual configuration of the vehicle:	名称 name	翘板开关含义 Meaning of rocker switch	图识 Image recognition	名称 name	翘板开关含义 Meaning of rocker switch
	智能排水开关 Intelligent drainage	单档自复位：用于实现手动储气筒排水。Single gear self		ATS 强启开关 ATS forced start switch	单档：ATS 控制器失效时用于手动强启 ATS 风扇。

图识开关的设置可能因车型而异，设置位置也可能不同。请根据车辆的实际配置参考以下正确使用方法：The setting of the image recognition switch may vary depending on the vehicle model, and the setting position may also be different. Please refer to the following correct usage methods based on the actual configuration of the vehicle:	名称 name	翘板开关含义 Meaning of rocker switch	图识 Image recognition	名称 name	翘板开关含义 Meaning of rocker switch
	switch	reset: used to achieve manual drainage of the gas storage			Single speed: Used for manually starting the ATS fan when

图识开关的设置可能因车型而异，设置位置也可能不同。请根据车辆的实际配置参考以下正确使用方法：The setting of the image recognition switch may vary depending on the vehicle model, and the setting position may also be different. Please refer to the following correct usage methods based on the actual configuration of the vehicle:	名称 name	翘板开关含义 Meaning of rocker switch	图识 Image recognition	名称 name	翘板开关含义 Meaning of rocker switch
		cylinder.			the ATS controller fails.
	低速蜂鸣器禁止开关	单档：低速蜂鸣器禁止。		前乘客门加热开关	单档：前乘客门加热。

图识开关的设置可能因车型而异，设置位置也可能不同。请根据车辆的实际配置参考以下正确使用方法：The setting of the image recognition switch may vary depending on the vehicle model, and the setting position may also be different. Please refer to the following correct usage methods based on the actual configuration of the vehicle:	名称 name	翘板开关含义 Meaning of rocker switch	图识 Image recognition	名称 name	翘板开关含义 Meaning of rocker switch
	Low speed buzzer prohibition switch	Single speed: The low-speed buzzer is disabled.		Front passenger door heating switch	Single gear: heated front passenger door.

图识开关的设置可能因车型而异，设置位置也可能不同。请根据车辆的实际配置参考以下正确使用方法：The setting of the image recognition switch may vary depending on the vehicle model, and the setting position may also be different. Please refer to the following correct usage methods based on the actual configuration of the vehicle:	名称 name	翘板开关含义 Meaning of rocker switch	图识 Image recognition	名称 name	翘板开关含义 Meaning of rocker switch
	司机灯开关 Driver's light switch	单档：用于打开盒关闭驾驶员上方顶灯。		厢灯开关 1 Cabin light switch 1	单档：用于车厢部分顶灯照明。 Single gear: used

图识开关的设置可能因车型而异，设置位置也可能不同。请根据车辆的实际配置参考以下正确使用方法：The setting of the image recognition switch may vary depending on the vehicle model, and the setting position may also be different. Please refer to the following correct usage methods based on the actual configuration of the vehicle:	名称 name	翘板开关含义 Meaning of rocker switch	图识 Image recognition	名称 name	翘板开关含义 Meaning of rocker switch
		Single gear: used to open the box and turn off the overhead			for partial overhead lighting of the carriage.

图识开关的设置可能因车型而异，设置位置也可能不同。请根据车辆的实际配置参考以下正确使用方法：The setting of the image recognition switch may vary depending on the vehicle model, and the setting position may also be different. Please refer to the following correct usage methods based on the actual configuration of the vehicle:	名称 name	翘板开关含义 Meaning of rocker switch	图识 Image recognition	名称 name	翘板开关含义 Meaning of rocker switch
		light above the driver.			
	厢灯开关 Cabin light	单档：用于车厢部分顶灯照		氛围开关 Atmosphere	单档：用于车厢氛围灯照明。

图识开关的设置可能因车型而异，设置位置也可能不同。请根据车辆的实际配置参考以下正确使用方法：The setting of the image recognition switch may vary depending on the vehicle model, and the setting position may also be different. Please refer to the following correct usage methods based on the actual configuration of the vehicle:	名称 name	翘板开关含义 Meaning of rocker switch	图识 Image recognition	名称 name	翘板开关含义 Meaning of rocker switch
	switch	明。 Single gear: used for partial overhead		switch	Single level: used for ambient lighting in the carriage.

图识开关的设置可能因车型而异，设置位置也可能不同。请根据车辆的实际配置参考以下正确使用方法：The setting of the image recognition switch may vary depending on the vehicle model, and the setting position may also be different. Please refer to the following correct usage methods based on the actual configuration of the vehicle:	名称 name	翘板开关含义 Meaning of rocker switch	图识 Image recognition	名称 name	翘板开关含义 Meaning of rocker switch
		lighting of the carriage.			
	氛围灯调节开关	单档：用于氛围灯调节。		加热器开关 Heater switch	双档：1 档水泵工作、2 档水泵

图识开关的设置可能因车型而异，设置位置也可能不同。请根据车辆的实际配置参考以下正确使用方法：The setting of the image recognition switch may vary depending on the vehicle model, and the setting position may also be different. Please refer to the following correct usage methods based on the actual configuration of the vehicle:	名称 name	翘板开关含义 Meaning of rocker switch	图识 Image recognition	名称 name	翘板开关含义 Meaning of rocker switch
	Atmosphere light adjustment switch	Single level: used for adjusting ambient			和加热器工作。Dual gears: 1st gear water pump operation, 2nd

图识开关的设置可能因车型而异，设置位置也可能不同。请根据车辆的实际配置参考以下正确使用方法：The setting of the image recognition switch may vary depending on the vehicle model, and the setting position may also be different. Please refer to the following correct usage methods based on the actual configuration of the vehicle:	名称 name	翘板开关含义 Meaning of rocker switch	图识 Image recognition	名称 name	翘板开关含义 Meaning of rocker switch
		lighting.			gear water pump and heater operation.

图识开关的设置可能因车型而异，设置位置也可能不同。请根据车辆的实际配置参考以下正确使用方法：The setting of the image recognition switch may vary depending on the vehicle model, and the setting position may also be different. Please refer to the following correct usage methods based on the actual configuration of the vehicle:	名称 name	翘板开关含义 Meaning of rocker switch	图识 Image recognition	名称 name	翘板开关含义 Meaning of rocker switch
	司机加热开关 Driver heating	单档：用于司机散热器加热 Single gear: used for heating		乘客区散热器开关 Passenger area radiator	单档：用于前门处散热器。 Single gear: Used for the radiator at

图识开关的设置可能因车型而异，设置位置也可能不同。请根据车辆的实际配置参考以下正确使用方法：The setting of the image recognition switch may vary depending on the vehicle model, and the setting position may also be different. Please refer to the following correct usage methods based on the actual configuration of the vehicle:	名称 name	翘板开关含义 Meaning of rocker switch	图识 Image recognition	名称 name	翘板开关含义 Meaning of rocker switch
	switch	the driver's radiator		switch	the front door.
	乘客区散热器开关	双档：用于前门处散热器		乘客区散热器开关	双档：用于前门处散热器（高、

图识开关的设置可能因车型而异，设置位置也可能不同。请根据车辆的实际配置参考以下正确使用方法：The setting of the image recognition switch may vary depending on the vehicle model, and the setting position may also be different. Please refer to the following correct usage methods based on the actual configuration of the vehicle:	名称 name	翘板开关含义 Meaning of rocker switch	图识 Image recognition	名称 name	翘板开关含义 Meaning of rocker switch
	Passenger area radiator switch	（高、低速）。Dual speed: Used for the		Passenger area radiator switch	低速）。Dual speed: Used for the radiator at the front door

图识开关的设置可能因车型而异，设置位置也可能不同。请根据车辆的实际配置参考以下正确使用方法：The setting of the image recognition switch may vary depending on the vehicle model, and the setting position may also be different. Please refer to the following correct usage methods based on the actual configuration of the vehicle:	名称 name	翘板开关含义 Meaning of rocker switch	图识 Image recognition	名称 name	翘板开关含义 Meaning of rocker switch
		radiator at the front door (high and low speed).			(high and low speed).

	坡行开关 Slope switch	单档，用于坡行 Single gear, used for slope driving		仪表台调节开关 Instrument panel adjustment switch	单档：用于仪表台调节。 Single gear: used for instrument panel adjustment.
	灯光开关 Light switch	开启小灯、前照灯自动大灯开关 Turn on the small light, headlight automatic headlight switch		门铃开关 Doorbell switch	单档，用于门铃开关 Single gear, used for doorbell switch
	遮阳帘开关 Sunshade switch	单档：遮阳帘上升。 Single gear: The sunshade rises.		遮阳帘开关 Sunshade switch	单档：遮阳帘下升。 Single gear: The sunshade is lowered.
	ELC 上升开关 ELC up switch	单档（可复位）：用于 ELC 悬架上升。 Single gear (resettable): Used for raising the ELC suspension.		ELC 下降开关 ELC descent switch	单档（可复位）：用于 ELC 悬架下降。 Single gear (resettable): Used for lowering the ELC suspension.

图识开关的设置可能因车型而异，设置位置也可能不同。请根据车辆的实际配置参考以下正确使用方法：The setting of the image recognition switch may vary depending on the vehicle model, and the setting position may also be different. Please refer to the following correct usage methods based on the actual configuration of the vehicle:	名称 name	翘板开关含义 Meaning of rocker switch	图识 Image recognition	名称 name	翘板开关含义 Meaning of rocker switch
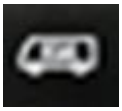	ELC 侧跪恢复开关 ELC Side Kneeling	单档（可复位）：用于 ELC 侧跪恢复。		ELC 侧跪开关 ELC Side Kneeling	单档（可复位）：用于 ELC 侧跪。 Single gear

图识开关的设置可能因车型而异，设置位置也可能不同。请根据车辆的实际配置参考以下正确使用方法：The setting of the image recognition switch may vary depending on the vehicle model, and the setting position may also be different. Please refer to the following correct usage methods based on the actual configuration of the vehicle:	名称 name	翘板开关含义 Meaning of rocker switch	图识 Image recognition	名称 name	翘板开关含义 Meaning of rocker switch
	Recovery Switch	Single gear (resettable): used for ELC lateral kneeling		Switch	(resettable): Used for ELC side kneeling.

图识开关的设置可能因车型而异，设置位置也可能不同。请根据车辆的实际配置参考以下正确使用方法：The setting of the image recognition switch may vary depending on the vehicle model, and the setting position may also be different. Please refer to the following correct usage methods based on the actual configuration of the vehicle:	名称 name	翘板开关含义 Meaning of rocker switch	图识 Image recognition	名称 name	翘板开关含义 Meaning of rocker switch
		recovery.			

图识开关的设置可能因车型而异，设置位置也可能不同。请根据车辆的实际配置参考以下正确使用方法：The setting of the image recognition switch may vary depending on the vehicle model, and the setting position may also be different. Please refer to the following correct usage methods based on the actual configuration of the vehicle:	名称 name	翘板开关含义 Meaning of rocker switch	图识 Image recognition	名称 name	翘板开关含义 Meaning of rocker switch
	ELC 第二高度开关（选装） ELC second	单档：用于 ELC 第二高度（选装）。 Single gear:		DDAW 预警声音开关 DDAW warning	单档：用于 DDAW 控制预警声音开启/关闭

图识开关的设置可能因车型而异，设置位置也可能不同。请根据车辆的实际配置参考以下正确使用方法：The setting of the image recognition switch may vary depending on the vehicle model, and the setting position may also be different. Please refer to the following correct usage methods based on the actual configuration of the vehicle:	名称 name	翘板开关含义 Meaning of rocker switch	图识 Image recognition	名称 name	翘板开关含义 Meaning of rocker switch
	height switch (optional)	Used for ELC second height (optional).		sound switch	Single mode: used for DDAW control warning sound on/off

图识开关的设置可能因车型而异，设置位置也可能不同。请根据车辆的实际配置参考以下正确使用方法：The setting of the image recognition switch may vary depending on the vehicle model, and the setting position may also be different. Please refer to the following correct usage methods based on the actual configuration of the vehicle:	名称 name	翘板开关含义 Meaning of rocker switch	图识 Image recognition	名称 name	翘板开关含义 Meaning of rocker switch
	残疾人踏板伸出开关 Disabled pedal	单档：残疾人踏板伸出。 Single gear: Disabled pedal		残疾人踏板收回开关 Disabled pedal	单档：残疾人踏板收回。 Single gear: Disabled pedal

图识开关的设置可能因车型而异，设置位置也可能不同。请根据车辆的实际配置参考以下正确使用方法：The setting of the image recognition switch may vary depending on the vehicle model, and the setting position may also be different. Please refer to the following correct usage methods based on the actual configuration of the vehicle:	名称 name	翘板开关含义 Meaning of rocker switch	图识 Image recognition	名称 name	翘板开关含义 Meaning of rocker switch
	extension switch	extended.		retraction switch	retraction

图识开关的设置可能因车型而异，设置位置也可能不同。请根据车辆的实际配置参考以下正确使用方法：The setting of the image recognition switch may vary depending on the vehicle model, and the setting position may also be different. Please refer to the following correct usage methods based on the actual configuration of the vehicle:	名称 name	翘板开关含义 Meaning of rocker switch	图识 Image recognition	名称 name	翘板开关含义 Meaning of rocker switch
	电池专用灭火器开关 Battery specific fire	电池着火时，打开此开关罩，按下此开关。		高压设备舱自动灭火器开关 Automatic	在高压设备舱有火情或紧急情况时，掀开灭火开关罩并按碎红色

图识开关的设置可能因车型而异，设置位置也可能不同。请根据车辆的实际配置参考以下正确使用方法：The setting of the image recognition switch may vary depending on the vehicle model, and the setting position may also be different. Please refer to the following correct usage methods based on the actual configuration of the vehicle:	名称 name	翘板开关含义 Meaning of rocker switch	图识 Image recognition	名称 name	翘板开关含义 Meaning of rocker switch
	extinguisher switch	When the battery catches fire, open this switch cover		fire extinguisher switch for high-voltage	按钮，即可启动灭火装置。When there is a fire or emergency

图识开关的设置可能因车型而异，设置位置也可能不同。请根据车辆的实际配置参考以下正确使用方法：The setting of the image recognition switch may vary depending on the vehicle model, and the setting position may also be different. Please refer to the following correct usage methods based on the actual configuration of the vehicle:	名称 name	翘板开关含义 Meaning of rocker switch	图识 Image recognition	名称 name	翘板开关含义 Meaning of rocker switch
		and press this switch.		equipment compartment	situation in the high-voltage equipment compartment, lift

图识开关的设置可能因车型而异，设置位置也可能不同。请根据车辆的实际配置参考以下正确使用方法：The setting of the image recognition switch may vary depending on the vehicle model, and the setting position may also be different. Please refer to the following correct usage methods based on the actual configuration of the vehicle:	名称 name	翘板开关含义 Meaning of rocker switch	图识 Image recognition	名称 name	翘板开关含义 Meaning of rocker switch
					the fire extinguishing switch cover and press the broken

图识开关的设置可能因车型而异，设置位置也可能不同。请根据车辆的实际配置参考以下正确使用方法：The setting of the image recognition switch may vary depending on the vehicle model, and the setting position may also be different. Please refer to the following correct usage methods based on the actual configuration of the vehicle:	名称 name	翘板开关含义 Meaning of rocker switch	图识 Image recognition	名称 name	翘板开关含义 Meaning of rocker switch
					red button to activate the fire extinguishing device.

图识开关的设置可能因车型而异，设置位置也可能不同。请根据车辆的实际配置参考以下正确使用方法：The setting of the image recognition switch may vary depending on the vehicle model, and the setting position may also be different. Please refer to the following correct usage methods based on the actual configuration of the vehicle:	名称 name	翘板开关含义 Meaning of rocker switch	图识 Image recognition	名称 name	翘板开关含义 Meaning of rocker switch
	鹅颈话筒开关 Gooseneck microphone	用于鹅颈话筒开启 Used to turn on the gooseneck	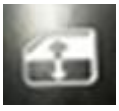	司机窗开关 Driver's window switch	用于司机窗开启 Used for opening the driver's window

图识开关的设置可能因车型而异，设置位置也可能不同。请根据车辆的实际配置参考以下正确使用方法：The setting of the image recognition switch may vary depending on the vehicle model, and the setting position may also be different. Please refer to the following correct usage methods based on the actual configuration of the vehicle:	名称 name	翘板开关含义 Meaning of rocker switch	图识 Image recognition	名称 name	翘板开关含义 Meaning of rocker switch
	switch	microphone			
	ESC 门开制动取消开关	用于 ESC(ESP)门开制动取消	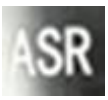	ASR 开关 ASR switch	用于关闭 ASR Used to close

图识开关的设置可能因车型而异，设置位置也可能不同。请根据车辆的实际配置参考以下正确使用方法：The setting of the image recognition switch may vary depending on the vehicle model, and the setting position may also be different. Please refer to the following correct usage methods based on the actual configuration of the vehicle:	名称 name	翘板开关含义 Meaning of rocker switch	图识 Image recognition	名称 name	翘板开关含义 Meaning of rocker switch
	ESC door open brake cancel switch	Used for ESC (ESP) door opening brake cancellation			ASR

图识开关的设置可能因车型而异，设置位置也可能不同。请根据车辆的实际配置参考以下正确使用方法：The setting of the image recognition switch may vary depending on the vehicle model, and the setting position may also be different. Please refer to the following correct usage methods based on the actual configuration of the vehicle:	名称 name	翘板开关含义 Meaning of rocker switch	图识 Image recognition	名称 name	翘板开关含义 Meaning of rocker switch
	MOIS 开关 MOIS switch	用于行驶区域信息提示系统预警声音开启/关闭		BSIS 开关 BSIS switch	用于盲点信息提示系统预警声音开启/关闭 Used for blind

图识开关的设置可能因车型而异，设置位置也可能不同。请根据车辆的实际配置参考以下正确使用方法：The setting of the image recognition switch may vary depending on the vehicle model, and the setting position may also be different. Please refer to the following correct usage methods based on the actual configuration of the vehicle:	名称 name	翘板开关含义 Meaning of rocker switch	图识 Image recognition	名称 name	翘板开关含义 Meaning of rocker switch
		Used for turning on/off the warning sound of the driving			spot information prompt system warning sound on/off

图识开关的设置可能因车型而异，设置位置也可能不同。请根据车辆的实际配置参考以下正确使用方法：The setting of the image recognition switch may vary depending on the vehicle model, and the setting position may also be different. Please refer to the following correct usage methods based on the actual configuration of the vehicle:	名称 name	翘板开关含义 Meaning of rocker switch	图识 Image recognition	名称 name	翘板开关含义 Meaning of rocker switch
		area information prompt system			
	ISA 开关 ISA switch	用于智能车速辅助系统预警	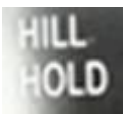	坡道保持开关	用于坡道保持 Used for slope

图识开关的设置可能因车型而异，设置位置也可能不同。请根据车辆的实际配置参考以下正确使用方法：The setting of the image recognition switch may vary depending on the vehicle model, and the setting position may also be different. Please refer to the following correct usage methods based on the actual configuration of the vehicle:	名称 name	翘板开关含义 Meaning of rocker switch	图识 Image recognition	名称 name	翘板开关含义 Meaning of rocker switch
		声音开启/关闭 Used for intelligent speed assistance		Ramp hold switch	maintenance

图识开关的设置可能因车型而异，设置位置也可能不同。请根据车辆的实际配置参考以下正确使用方法：The setting of the image recognition switch may vary depending on the vehicle model, and the setting position may also be different. Please refer to the following correct usage methods based on the actual configuration of the vehicle:	名称 name	翘板开关含义 Meaning of rocker switch	图识 Image recognition	名称 name	翘板开关含义 Meaning of rocker switch
		system warning sound on/off			

2.3.10.行驶稳定控制系统

2.3.10. Driving Stability Control System

制动防抱死（ABS）、防侧滑（ASR）系统、电控制动系统（EBS）、电子稳定控制系统（ESC(ESP)）均属于行驶稳定控制系统，该系统可提高行驶安全性。

车辆安装 ABS 和 ASR 系统时，仪表台安装有开关和报警灯（如下图）。钥匙 ON 档上电后 ABS 通电时仪表台上的 ABS 指示灯必须点亮，上电自检 3 秒钟，此时系统进行自检能听到 4 声阀响（4S/4M 系统），若无故障 3 秒钟后指示灯自动熄灭。如果行车中 ABS 灯常亮，表示系统有故障。

Anti lock braking system (ABS), anti-skid system (ASR), electronic brake system (EBS), and electronic stability control system (ESC (ESP)) all belong to driving stability control systems, which can improve driving safety.

When installing ABS and ASR systems on vehicles, the dashboard is equipped with switches and warning lights (as shown in the figure below). When the ABS is powered on after the key is turned on, the ABS indicator light on the dashboard must light up. The power on self-test lasts for 3 seconds. At this time, the system can hear 4 valve sounds during self-test (4S/4M system). If there is no fault, the indicator light will automatically turn off after 3 seconds. If the ABS light stays on while driving, it indicates a system malfunction.



图 34 ASR 开关和报警灯示意图（指示灯选装）

Figure 34 Schematic diagram of ASR switch and alarm light (optional indicator light)

ABS 系统的主要优点在于紧急制动时防止车轮被抱死、防止打滑，从而最大程度保证转向控制性能及行驶稳定性。

ASR 为防车辆侧滑系统，避免车辆起步或加速时产生打滑现象，保证车辆行驶方向的稳定性。如果转弯时车辆发生侧滑，当有 ASR 时可使车辆沿着正确的路线转向，降低安全风险。**ASR 系统安装情况应视车辆实际配置。**

EBS 是基于 ABS 系统通过电子信号实现快速制动的车辆安全系统。车辆每次上电时，EBS 系统会进行自检，仪表上指示灯会先点亮，再熄灭；EBS 系统出现一般故障时，仪表显示黄色标识；EBS 系统出现严重故障时，仪表显示红色标识。

ESC(ESP)是基于 ABS 或 EBS 的高级稳定系统，可减少因转弯行驶出现转向不足或过度转向时车辆侧翻危险，最大程度保证转向控制性能及整车稳定性。车辆每次上电时，ESC(ESP)系统会进行自检，仪表上指示灯会先点亮再熄灭；ESC(ESP)工作时，仪表显示黄色标识并提示“ESC 工作”，ESC(ESP)系统出现故障时，仪表显示黄色标识，并提示“ESC 故障”。

闪码诊断方式如下：

The main advantage of the ABS system is to prevent the wheels from locking and slipping during emergency braking, thereby maximizing steering control performance and driving stability.

ASR is an anti slip system for vehicles, which prevents slippage during start-up or acceleration and ensures the stability of the vehicle's direction of travel. If the vehicle slips during a turn, ASR can steer the vehicle along the correct route and reduce safety risks. The installation of ASR system should be based on the actual configuration of the vehicle.

EBS is a vehicle safety system based on ABS system that achieves rapid braking through electronic signals. Every time the vehicle is powered on, the EBS system will perform a self check, and the indicator light on the instrument panel will first light up and then turn off; When the EBS system experiences a general malfunction, the instrument displays a yellow indicator; When the EBS system experiences a serious malfunction, the instrument displays a red indicator.

ESC (ESP) is an advanced stability system based on ABS or EBS, which can reduce the risk of vehicle rollover when understeer or oversteer occurs during turning, ensuring maximum steering control performance and overall vehicle stability. Every time the vehicle is powered on, the ESC (ESP) system will perform a self check, and the indicator light on the instrument panel will first turn on and then turn off; When ESC (ESP) is working, the instrument panel displays a yellow indicator and prompts "ESC working". When the ESC (ESP) system malfunctions, the instrument panel displays a yellow indicator and prompts "ESC malfunction".

The flashing code diagnosis method is as follows:

模式 **pattern**	**程 序** **Program**	**系统反应** **System response**	**操 作** **Operation**
诊断 diagnosis	第一步：打开点火开关。 Step 1: Turn on the ignition switch.		
	第二步：ABS 系统自检，如果系统有故障，自动进入闪码状态。 Step 2: Self check of ABS system. If there is a fault in the system, it will	ABS 指示灯只闪当前第一个故障码，且只闪一次。 The ABS indicator light only flashes the current first fault	对照闪码表确定故障类型 Determine the fault type by comparing the

模式 pattern	程 序 Program	系统反应 System response	操 作 Operation
	automatically enter a flashing code state.	code and only flashes once.	flashing code table
	第三步：排除故障 Step 3: Troubleshooting	当前故障 Current malfunction	进行必要修正 Make necessary corrections

故障排除后，再次打开点火开关，ABS 接通电源后，ABS 指示灯亮。系统进入自检过程，如系统无故障，听到 4 声阀响（4S/4M 系统），3 秒钟后 ABS 指示灯自动熄灭。若系统有故障，ABS 指示灯将会报故障，需要再次进行故障诊断。

After troubleshooting, turn on the ignition switch again, and when the ABS is powered on, the ABS indicator light will turn on. The system enters the self-test process. If there is no fault in the system, four valve sounds (4S/4M system) will be heard, and the ABS indicator light will automatically turn off after 3 seconds. If there is a malfunction in the system, the ABS indicator light will report a fault and require further fault diagnosis.

警告

●ABS 系统的功能受限于道路附着力，因此，切记，在潮湿或光滑路面上行驶时，一旦发现车轮有抱死倾向，即应降低车速，适应道路及交通状况，切勿利用 ABS 提供的有限安全功能进行冒险。

●ABS/ASR/EBS/ESC(ESP)系统发生故障时，对应的系统警报灯即亮。但不影响除常规气制动刹车装置功能，其它刹车装置仍起作用，且对于故障车辆应尽快去维修。

●任何情况下切不可误认为 ABS、EBS 系统均能缩短制动距离，ESC(ESP)均能防止车辆侧翻、ASR 均能防止车辆起步或加速时驱动轮打滑。以上功能受限于道路附着力，如果在碎石路面或在下过雪的光滑路面上行驶时（通常需降速谨慎驾驶），一旦发现车轮有抱死或者滑动倾向，应降低车速，并保证安全的行车距离，切勿依赖其提供的有限安全功能进行冒险，切记 ABS/ASR/EBS/ESC(ESP)仅为辅助安全系统，主要决策者仍是驾驶员，驾驶车辆时不能对其过分依赖。

●车辆配置 ASR 时，会在仪表台配置使能开关，可人工选择关闭该功能，车辆重启上电后系统默认为 ASR 开启状态。

●ABS/ASR/EBS/ESC(ESP)详细使用说明及故障处理等请参考其使用说明书。

●禁止行驶中调整ABS/ASR/EBS/ESC(ESP)系统，行车前需确认系统正常工作后方可上路行驶。

●ABS/ASR/EBS/ESC(ESP)系统故障无法处理时，请联系亚星特约维修站处理。

警告

●因车辆配置不同，具体安装情况以实车为准。

●The function of the ABS system is limited by road adhesion. Therefore, it is important to remember that when driving on wet or smooth roads, if you notice a tendency for the wheels to lock up, you should reduce your speed and adapt to the road and traffic conditions. Do not take risks by using the limited safety features provided by ABS.

●When the ABS/ASR/EBS/ESC (ESP) system malfunctions, the corresponding system alarm light will turn on. But it does not affect the function of other brake devices except for conventional air brake devices, and for faulty vehicles, they should be repaired as soon as possible.

●Under no circumstances should one mistakenly believe that ABS and EBS systems can shorten braking distance, ESC (ESP) can prevent vehicle rollover, and ASR can prevent driving wheel slip during vehicle start-up or acceleration. The above functions are limited by road adhesion. If driving on gravel roads or smooth roads with snow (usually requiring slow and cautious driving), if the wheels are found to be stuck or sliding, the speed should be reduced and a safe driving distance should be ensured. Do not rely on the limited safety functions provided by ABS/ASR/EBS/ESC (ESP) for adventure. Remember that ABS/ASR/ESC is only an auxiliary safety system, and the main decision maker is still the driver. When driving the vehicle, do not overly rely on it.

●When configuring ASR on the vehicle, an enable switch will be configured on the dashboard, which can be manually selected to turn off the function. After the vehicle is restarted and powered on, the system defaults to ASR on state.

●Please refer to the user manual for detailed instructions and troubleshooting of ABS/ASR/EBS/ESC (ESP).

● It is forbidden to adjust the ABS/ASR/EBS/ESC (ESP) system while driving. Before driving, it is required to confirm that the system is working normally before driving.

●When the ABS/ASR/EBS/ESC (ESP) system malfunction cannot be resolved, please contact the Asia Star authorized repair station for assistance.

●Due to different vehicle configurations, the specific installation situation shall be subject to the actual vehicle.

2.3.11.制动防抱死（ABS）及防侧滑（ASR）系统

2.3.11. Anti lock Braking System (ABS) and Anti Slip Braking System (ASR)

车辆安装 ABS 和 ASR 系统时，仪表台安装有开关和报警灯（如下图）。钥匙 ON 档上电后 ABS 通电时仪表台上的 ABS 指示灯必须点亮，上电自检 3 秒钟，此时系统进行自检能听到 4 声阀响（4S/4M 系统），若无故障 3 秒钟后指示灯自动熄灭。如果行车中 ABS 灯常亮，表示系统有故障。

When installing ABS and ASR systems on vehicles, the dashboard is equipped with switches and warning lights (as shown in the figure below). When the ABS is powered on after the key is turned on, the ABS indicator light on the dashboard must light up. The power on self-test lasts for 3 seconds. At this time, the system can hear 4 valve sounds during self-test (4S/4M system). If there is no fault, the indicator light will automatically turn off after 3 seconds. If the ABS light stays on while driving, it indicates a system malfunction.



图 35 ASR 开关和报警灯（指示灯选装）

Figure 35 ASR switch and alarm light (optional indicator light)

ABS 属主动安全系统，该系统可显著提高行驶安全性。与常规制动系统相比，ABS 系统的主要优点在于紧急制动时，即使顺光滑路面上紧急制动时也可防止车轮被抱死、防止打滑，从而最大程度保证转向控制性能及行驶稳定性。

ASR 为防车辆侧滑系统，避免车辆起步或加速时产生打滑现象，保证车辆行驶方向的稳定性。如果转弯时车辆发生侧滑，当有 ASR 时可使车辆沿着正确的路线转向，降低安全风险。ASR 系统安装情况应视车辆实际配置。

闪码诊断方式如下：

ABS is an active safety system that can significantly improve driving safety. Compared with conventional braking systems, the main advantage of ABS systems is that during emergency braking, even on smooth roads, it can prevent the wheels from locking up and slipping, thereby maximizing steering control performance and driving stability.

ASR is an anti slip system for vehicles, which prevents slippage during start-up or acceleration and ensures the stability of the vehicle's direction of travel. If the vehicle slips during a turn, ASR can steer the vehicle along the correct route and reduce safety risks. The installation of ASR system should be based on the actual

configuration of the vehicle.

The flashing code diagnosis method is as follows:

模式 pattern	程序 program	系统反应 System response	操作 operation
诊断 diagnosis	第一步：打开点火开关。 Step 1: Turn on the ignition switch.		
	第二步：ABS 系统自检，如果系统有故障，自动进入闪码状态。 Step 2: Self check of ABS system. If there is a fault in the system, it will automatically enter a flashing code state.	ABS 指示灯只闪当前第一个故障码，且只闪一次。 The ABS indicator light only flashes the current first fault code, and only flashes once	对照闪码表确定故障类型 Determine the fault type by comparing the flashing code table
	第三步：排除故障 Step 3: Troubleshooting	当前故障 Current malfunction	进行必要修正 Make necessary corrections

故障排除后，再次打开点火开关，ABS 接通电源后，ABS 指示灯亮。系统进入自检过程，如系统无故障，听到 4 声阀响（4S/4M 系统），3 秒钟后 ABS 指示灯自动熄灭。若系统有故障，ABS 指示灯将会报故障，需要再次进行故障诊断。

After troubleshooting, turn on the ignition switch again, and when the ABS is powered on, the ABS indicator light will turn on. The system enters the self-test process. If there is no fault in the system, four valve sounds (4S/4M system) will be heard, and the ABS indicator light will automatically turn off after 3 seconds. If there is a malfunction in the system, the ABS indicator light will report a fault and require further fault diagnosis.

警告

●ABS 系统的功能受限于道路附着力，因此，切记，在潮湿或光滑路面上行驶时，一旦发现车轮有抱死倾向，即应降低车速，适应道路及交通状况，切勿利用 ABS 提供的有限安全功能进行冒险。

●ABS/ASR 系统发生故障时，对应的系统警报灯即亮。但不影响除常规气制动刹车装置功能，其它刹车装置仍起作用，且对于故障车辆应尽快去维修。

●任何情况下切不可误认为 ABS 系统均能缩短制动距离，某些情况下，如果在碎石路面或在下过雪的光滑路面上行驶时（通常需降速谨慎驾驶），制动距离可能更长。

警告

●当车辆 ABS 功能启动时，驱动电机制动能量回收功能屏蔽，但正常气制动系统工作正常。

●车辆配置 ASR 时，会在仪表台配置使能开关，可人工选择关闭该功能，车辆重启上电后系统默认为 ASR 开启状态。

●当车辆ASR功能启动时，驱动电机牵引力输出将受限，ASR退出后恢复正常。

●ABS/ASR详细使用说明及故障处理等请参考其使用说明书。

●当系统故障无法处理时，请联系亚星维修站处理。

●The function of the ABS system is limited by road adhesion. Therefore, it is important to remember that when driving on wet or smooth roads, if you notice a tendency for the wheels to lock up, you should reduce your speed and adapt to the road and traffic conditions. Do not take risks by using the limited safety features provided by ABS.

●When the ABS/ASR system malfunctions, the corresponding system alarm light will turn on. But it does not affect the function of other brake devices except for conventional air brake devices, and for faulty vehicles, they should be repaired as soon as possible.

●Under no circumstances should one mistakenly believe that the ABS system can shorten the braking distance. In some cases, if driving on gravel roads or smooth roads with snow (usually requiring slow and cautious driving), the braking distance may be longer.

●When the ABS function of the vehicle is activated, the braking energy recovery function of the drive motor is blocked, but the normal air brake system works normally.

●When configuring ASR on the vehicle, an enable switch will be configured on the dashboard, which can be manually selected to turn off the function. After the vehicle is restarted and powered on, the system defaults to ASR on state.

●When the ASR function of the vehicle is activated, the traction output of the drive motor will be limited, and it will return to normal after ASR is exited.

●Please refer to the user manual for detailed instructions and troubleshooting of ABS/ASR.

●When the system malfunction cannot be resolved, please contact the Yaxing repair station for assistance.

2.3.12.倒车监视器

2.3.12. Reverse Monitor

一、示例一

1、 Example 1

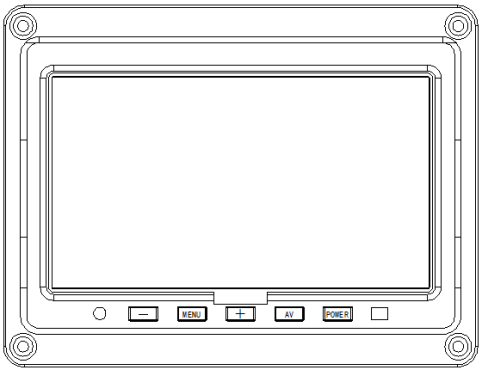

图 36 倒车监视器示意图

Figure 36 Schematic diagram of reverse monitor

1. 车辆启动后，按显示器屏的“POWER”键，打开显示器电源，显示器启动后默认；

2. 视频输入通道；如视频无输入，显示器显示蓝屏状态；

3. 可以按显示器上的“AV”键在倒车影像和视频输入通道切换；

4. 如第一次使用，操作者可以调整显示器参数；

5. MENU: 亮度、对比度、色度的调整，连续按菜单键，可分别进入亮度(BRIGHT)、对比度(CONTRAST)、色度(COLOR)、菜单项，按“＋”、“－”可以提高或降低该值。复位 (RESET)：连续按菜单键进入复位 (RESET)，按量加、量减可以将菜单恢复到出厂前预设定的值；

6. 挂倒车档后，显示器自动切换到倒车影像通道，切换瞬间，由于后视倒车红外摄像头启动自动测光，显示器显示图象可能太亮或太暗属于正常现象，后视倒车红外镜头测光完成后，自动调整到最佳显示状态，显示器画面显示正常后，方可倒车操作此类现象也可能发生在车辆由场内到场外，场外到场内光亮对比强烈的切换场景，待镜头测光完成后，再安全倒车；

7. 在低照度下，如夜间，后视镜头红外灯启动照亮物体，镜头感光元件据物体反射红外光识别物体，显示屏显示效果接近黑白效果是正常现象，请放心使用；

8. 倒车档位取消后，显示器切换到视频输入通道，如无视频输入，显示器显示蓝屏；

9. 如长时间不用显示图象， 按“POWER”键关闭显示器电源；如要显示图象（倒车或视频输入），按“POWER”键打开显示器；

10. 使用一段时间后，显示器屏幕受低尘会影响可视效果，先用柔软干棉布擦拭显示器表面，也可进一步用电脑显示器清洗液，喷雾于显示器表面但不能在表面形成可流动水滴状喷液，用棉步或棉球轻擦。待显示器表面干燥后再开机；

11. 显示图像模糊时，除显示器因素外，后视摄像头镜面可能覆盖积尘，可用柔软湿棉布擦拭镜头，也可冲淋后视摄像头，禁止高压水枪直冲摄像头；

12. 使系统远离强酸、碱环境，以防系统加速老化，影响寿命；

13. 保护系统线束牢靠性，避免装卸货物、行驶过程中冲撞系统，如遇线路松脱，请及时联系专业人士处理；

14. 严禁在行驶及其它有安全隐患情况下用此系统观看其它视频节目。

1. After starting the vehicle, press the "POWER" button on the display screen to turn on the power of the display. The display defaults to the default mode after starting;

2. Video input channel; If there is no input in the video, the monitor will display a blue screen status;

3. You can switch between the reverse image and video input channels by pressing the "AV" button on the monitor;

4. If used for the first time, the operator can adjust the display parameters;

5. MENU: Adjust brightness, contrast, and chromaticity. Press the menu keys continuously to enter the Brightness, Contrast, COLOR, and other menu items. Press "+" or "-" to increase or decrease these values. RESET: Press the menu button continuously to enter the RESET mode. By increasing or decreasing the value, the menu can be restored to the pre-set value before leaving the factory;

6. After shifting to reverse gear, the display automatically switches to the reverse image channel. At the moment of switching, due to the automatic metering of the rearview reverse infrared camera, the displayed image on the display may be too bright or too dark, which is a normal phenomenon. After the rearview reverse infrared lens metering is completed, it automatically adjusts to the optimal display state. Only after the display screen is normal, can the reverse operation be carried out. This phenomenon may also occur in scenarios where the vehicle switches from inside the field to outside the field, and there is a strong contrast of brightness between outside and inside the field. After the camera metering is completed, it can be safely reversed;

7. In low light conditions, such as at night, the infrared light of the rearview lens is activated to illuminate objects, and the lens sensor recognizes objects based on the reflected infrared light. It is normal for the display screen to have a display effect close to black and white, so please feel free to use it;

After the reverse gear is cancelled, the display switches to the video input channel. If there is no video input, the display shows a blue screen;

If the image is not displayed for a long time, press the "POWER" button to turn off the monitor power; To display images (reverse)

Or video input), press the "POWER" key to turn on the monitor;

10. After using for a period of time, the visual effect of the display screen will be affected by the low dust. First, wipe the display surface with a soft dry cotton cloth, or further use the computer display

cleaning solution. spray on the display surface, but can not form a flowing water droplet on the surface. Gently wipe with a cotton step or cotton ball. Wait for the surface of the monitor to dry before turning it on;

11. When the displayed image is blurry, in addition to the display factor, the rearview camera mirror may be covered with dust. You can use a soft damp cotton cloth to wipe the lens, or rinse the rearview camera. It is forbidden to use a high-pressure water gun to directly hit the camera;

12. Keep the system away from strong acid and alkali environments to prevent accelerated aging and affect its lifespan;

13. Ensure the reliability of the protection system wiring harness to avoid collisions with the system during loading and unloading of goods or driving. In case of loose wiring, please contact professionals in a timely manner for handling;

14. It is strictly prohibited to use this system to watch other video programs while driving or in other situations with safety hazards.

二、示例二

2、 Example 2



图 37 倒车监视器示意图

Figure 37 Schematic diagram of reverse monitor



图 38 功能键示意图

Figure 38 Schematic diagram of function keys

功能键 Function keys	说 明 explain
	菜单按键，可以设置图像的亮度、对比度、色度、色调以及菜单语言等功能； The menu button can be used to set the brightness, contrast, chromaticity, color tone, and menu language of the image;
	调整按键，配合菜单按键，进行数值减少调整； Adjust the buttons, in conjunction with the menu buttons, to make numerical reduction adjustments;
	调整按键，配合菜单按键，进行数值增加调整； Adjust the buttons, in conjunction with the menu buttons, to increase the numerical value;
	电源按键，可以打开或关闭本机器电源； The power button can turn on or off the power of this machine;
	图像输入选择按键，可以手动选择输入 1 录像机画面，或输入 2 倒车摄像头画面； The image input selection button allows for manual selection of input 1 for the video recorder screen or input 2 for the reverse camera screen;
	图像翻转按键，可以把图像变成正像或镜像，或上下颠倒； The image flip button can turn the image into a positive or mirror image, or flip it up and down;
	图像模式按键：可以根据车辆所处的工作环境，选择鲜明、生动、标准、柔和四种图像模式中的一个； Image mode button: Depending on the working environment of the vehicle, you can choose one of four image modes: vivid, standard, or soft;

规格 specifications	ZY-TV9R-AHD
液晶屏 LCD screen	9 英寸高亮、高清数字新屏 9-inch high brightness, high-definition digital new screen
屏幕比例 Screen ratio	16 : 9

规格 specifications	ZY-TV9R-AHD
屏幕分辨率 Screen resolution	1024* *600 R.G.B
视角范围 Viewing Angle	上下—180°，左 右—180° Up and down -180 °, left and right -180 °
背光亮度 Backlight brightness	LED，亮度 500cd/m2 LED, brightness 500cd/m2
视频输入 VIDEO IN	三路高清视频输入，支持 720P@25/30,960P50/60，1080P@25/30（AHD /CVBS 兼容） Three high-definition video inputs, supporting 720P@25 /30,960P50/60， 1080P@25 /30 (AHD/CVBS compatible)
触发控制 Trigger	三路触发 （V2>V1>V3) Triple trigger (V2>V1>V3)
制 式 Standard format	NTSC & PAL
OSD 控制 OSD control	亮度，对比度，饱和度，音量，语言（英语，简体中文） Brightness, contrast, saturation, volume, language (English, Simplified Chinese)
图像翻转 Image flipping	左右上下翻转 Flip left, right, up, and down
电源 power supply	DC 12-24V 输入 DC 12-24V input
功耗 power consumption	5W
存储温度 storage temperature	-30∽80℃
工作温度	-20℃ to 70℃

规格 specifications	ZY-TV9R-AHD
operation temperature	
外观颜色 Appearance color	黑色橡胶油漆 ， 带可拆卸遮阳设计 Black rubber paint with detachable sunshade design
接口 interface	4 PIN 航空头（RCA/BNC 可选） 4 PIN aviation head (RCA/BNC optional)
支架 bracket	嵌入安装盒（可选 U 型支架、蝴蝶扇型吸盘） Embedded installation box (optional U-shaped bracket, butterfly fan suction cup)

三、示例三

3、 Example Three



图 39 倒车监视器示意图

Figure 39 Schematic diagram of reverse monitor

详见倒车监视器使用说明书

Please refer to the instruction manual for the reverse monitor for details

⚠注意
车型配置不同，具体型号可能不同，详见随车倒车监视器使用说明书 The specific model may vary depending on the vehicle configuration. Please refer to the user manual of the accompanying reverse monitor for details

2.3.13.收放机

2.3.13. Radio and tape player

一、示例一

1、 Example 1



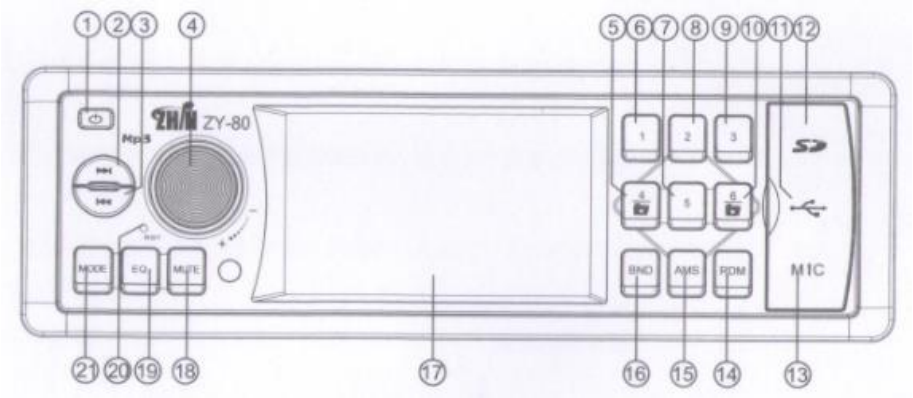

图 40 收放机示意图

Figure 40 Schematic diagram of radio and tape player

1、电源开关键
Power switch key

2、向高端搜索电台/下一曲键
Search for high-end radio stations/next song key

3、向低端搜索电台/上一曲键
Search for radio stations/previous song button towards the lower end

4、音量旋钮/音频调节键
Volume knob/audio adjustment

5、数字 4 键
Number 4 key

6、数字 1 键
Number 1 key

7、数字 5 键
Number 5 key

key

8、数字 2 键 Number 2 key	9、数字 3 键 Number 3 key	10、数字 6 键 Number 6 key	11、U 盘插座 USB socket	12、SD 卡插座 SD card socket
13、MIC 播孔 MIC broadcasting hole	14、随时播放键 Play button anytime	15、自动搜索电台键 Auto search radio button	16、波段转换 bandswitching	17、显示屏 display
18、静音键 mute button	19、音效键 Sound effect key	20、复位键 reset key	21、模式转换键 Mode conversion key	

二、示例二

2、 Example 2

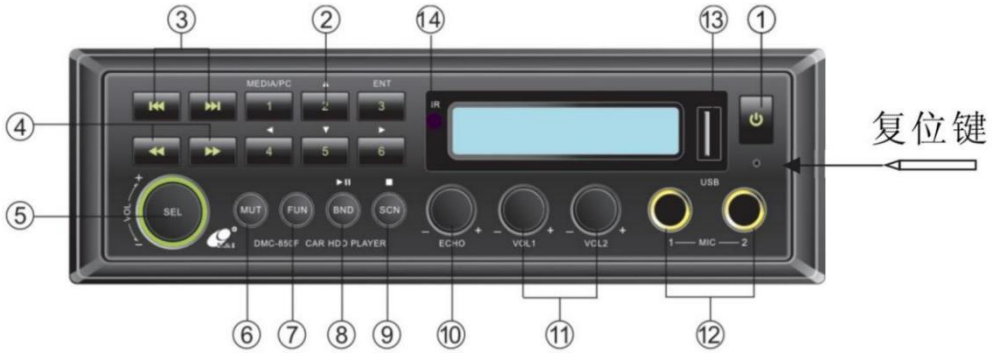

图 41 收放机示意图

Figure 41 Schematic diagram of radio and tape player

1、收放机面板按键说明：

Instructions for the buttons on the radio and tape player panel:

序号 Serial Number	按 键 Key	功能介绍 Function Introduction
①	⏻	电源开/关 Power on/off
②	1～6	收音状态下预存电台 Pre stored radio station in receiving state
	▲▼◀▶	上、下、左、右选择 Select up, down, left, and right
	MEDIA/PC	媒体/电脑切换键 Media/Computer Switch Key

序号 Serial Number	按 键 Key	功能介绍 Function Introduction
	ENT	确认键 Confirm key
③	▮◀◀	HDD 播放状态下选择前一章节或曲目收音机状态下向前手动索频率 Select the previous chapter or track in HDD playback mode and manually search for the frequency forward in radio mode
	▮▶▶	HDD 播放状态下选择后一章节或曲目收音机状态下向后手动搜索频率 Select the next chapter or track in HDD playback mode and manually search for frequency backward in radio mode
④	◀◀	HDD 播放状态下快速后退 收音机状态下向前自动搜索频率 Quickly rewind in HDD playback mode Automatically search for frequency forward in radio mode
	▶▶	HDD 播放状态下快速前进 收音机状态下向后自动搜索频率 Fast forward in HDD playback mode Automatic backward frequency search in radio mode
⑤	SEL	音效设置 Sound effect settings
⑥	MUT	静音 mute
⑦	FUN	TUNE/DISC/AUX 切换 TUNE/ISC/AUX switching
⑧	▶▮▮/BND	播放暂停按钮/收音机状态波段切换 Play pause button/radio status band switching

序号 Serial Number	按 键 Key	功能介绍 Function Introduction
⑨	■/SCN	返回按钮/ 收音机状态下自动搜索存台按钮 Return button/ Automatic search and storage button in radio mode
⑩	ECHO	混响控制旋钮 用于控制 MIC1 和 MIC2 的混响效果 Reverb control knob Used to control the reverberation effect of MIC1 and MIC2
⑪	VOL1　VOL2	话筒音量旋钮 调节 MIC1 和 MIC2 的音量 Microphone volume knob Adjust the volume of MIC1 and MIC2
⑫	MIC1　MIC2	话筒插口 Microphone jack
⑬	USB	USB 接口 USB interface
⑭	IR	遥控接收窗口　remote control receiving window

2、遥控器说明

2. Remote Control Instructions

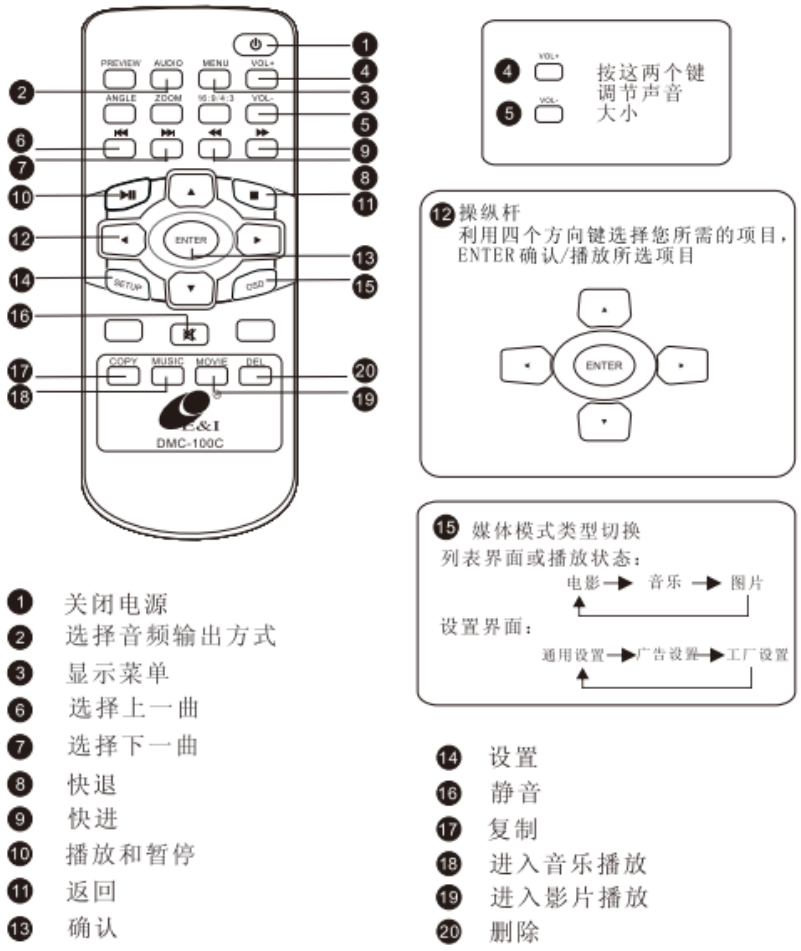

图 42 收放机遥控器功能说明图

Figure 42 Function description diagram of remote control for radio and tape player

3、收放机基本操作：

(1) 打开/关闭电源

按下面板 ⏻ 上的键，打开/关闭电源。自带记忆播放功能，在播放时关闭电源或将点火钥匙转到 OFF，再次打开电源时将从前次停止播放处继续播放。

(2) 调整音量

顺时针旋转面板上音量调节旋钮 VOL 增加音量，逆时针旋转面板上音量调节旋钮 VOL 减小音量。

(3) 静音设置

播放时按下面板上的 MUT 键，启动静音功能，此时 LCD 屏上显示“MUTE”字样。再次按下面板上的 MUT 键，静音功能取消。

具体的按键操作说明及注意事项参见随车发放的收放机使用说明书。

3. Basic operation of radio and tape player:

(1) Turn on/off the power

Press the button on the panel to turn on/off the power. Equipped with memory playback function, when playing,

turn off the power or turn the ignition key to OFF. When turning on the power again, the playback will continue from the previous stop.

(2) Adjust the volume

Rotate the volume control knob VOL on the panel clockwise to increase the volume, and counterclockwise to decrease the volume.

(3) Mute setting

When playing, press the MUT button on the panel to activate the mute function, and the LCD screen will display the word "MUTE". Press the MUT button on the panel again to cancel the mute function.

For specific button operation instructions and precautions, please refer to the accompanying radio and tape player user manual.

三、示例三

3、 Example Three

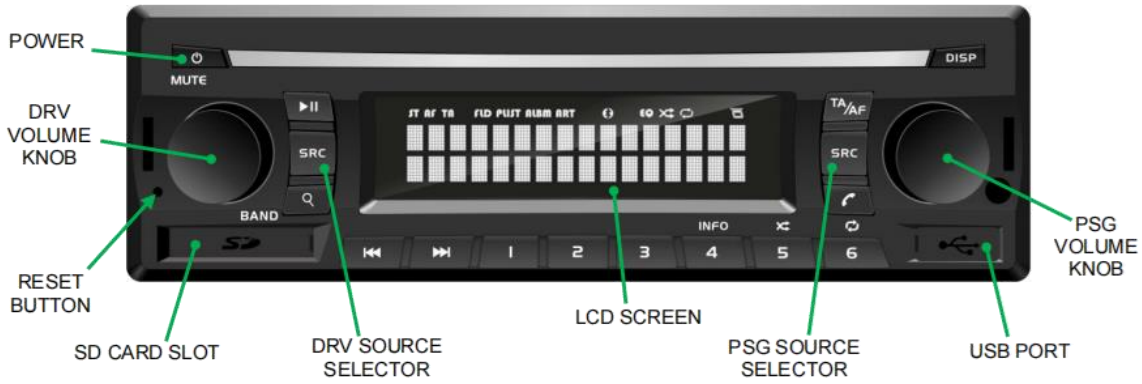

图 43 收放机示意图

Figure 43 Schematic diagram of radio and tape player

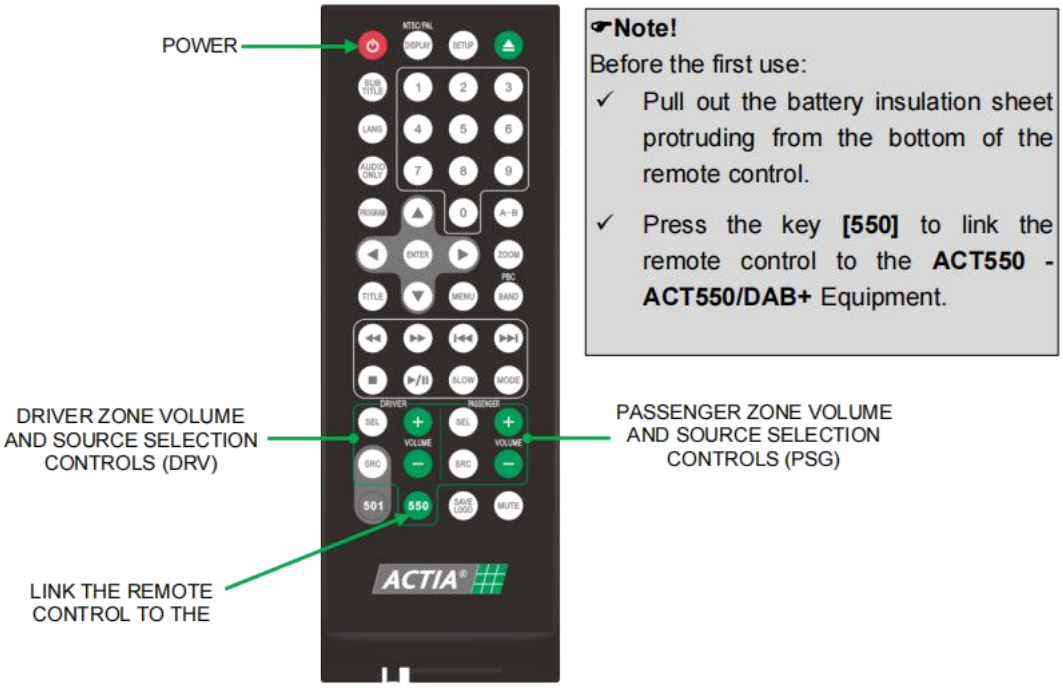

图 44 收放机遥控示意图

Figure 44 Schematic diagram of remote control for radio and tape player

具体操作见收放机使用手册。

Please refer to the user manual for the radio and tape player for specific instructions.

警告

- 车辆行驶中不建议使用收音机，以免分散驾驶员注意力影响行车安全。
- 车型配置不同，具体型号可能不同(详见随车收放机使用说明书)。
- It is not recommended to use a radio while driving to avoid distracting the driver's attention and affecting driving safety.
- The specific model may vary depending on the vehicle configuration (see the accompanying radio and tape player user manual for details).

2.3.14.行车记录仪

2.3.14. Driving recorder

一、行车记录仪（一）

1、 Driving recorder (1)

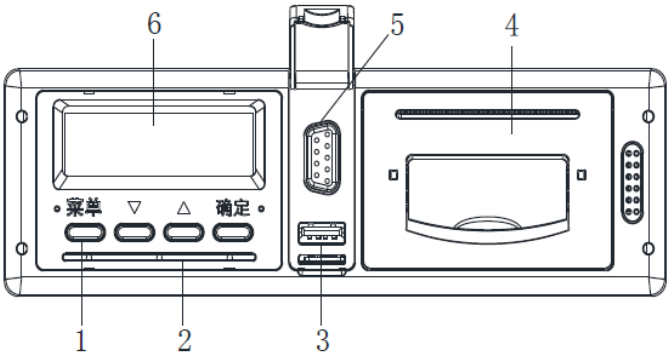

图 45 行车记录仪示意图

Figure 45 Schematic diagram of driving recorder

1. 菜单键 Menu key
2. IC 卡插口 IC card socket
3. U 盘接口 U-disk interface
4.打印机 printer
4. RS232 接口 RS232 interface
5. 显示屏 display

1. 按键功能说明

(1) “菜单”键

可切换默认显示与主菜单页面；

可用于返回上级菜单；

在输入页中向左移一位，在最左一位时返回上级菜单。

(2) 向下键“▼”

在列表中用于选中下一行；

在数字输入页中用于当前数字减一；

在显示页面用于向下翻一页。

(3) 向上键“▲”

在列表中用于选中上一行；

在数字输入页中用于当前数字加一；

在显示页面用于向上翻一页。

(4) “确定”键

可用于进入下一级菜单；

在输入页中用于向右移一位，在最后一位时用于确认输入内容；

可用于操作确认。

2. 快捷键

(1) 启动快捷键：在熄火状态下按“菜单”键，记录仪可被唤醒进入工作状态；

(2) 退出登录快捷键：在默认显示页按“▼”键，直接退出登录，方便司机操作；

(3) U 盘采集数据快捷键：在默认显示页按“▲”键，直接进入文件操作子菜单，方便日常数据采集。

(4) 打印快捷键：在默认显示页按“确定”，直接进入打印子菜单，可快捷地进行国标格式打印。

(5) 关机快捷键：在点火关闭而外部电源没关的情况下，按“确定”3～5 秒,屏幕一闪后，记录仪关闭。

3. 打印机维护

记录仪使用内置热敏打印机，需要使用热敏打印纸，纸的尺寸规格为 25*50mm。用户在换纸时需先断电再换纸。换纸时，先扣住打印盖板的沟槽往外勾把打印盖板打开，然后把打印纸卷好平整的换上，操作如（打印机操作示意图 1 ）所示；接着盖上打印盖板，盖打印盖板时要注意，得先把打印盖板的顶部盖上后，再盖上打印盖板的底部，具体操作如（打印机操作示意图 2 ）所示。

1. Key Function Description

(1) Menu button

Can switch between default display and main menu page;

Can be used to return to the higher-level menu;

Move one position to the left in the input page, and return to the upper menu when at the leftmost position.

(2) Down arrow key "▼"

Used to select the next row in the list;

Used in the digital input page to subtract one from the current number;

Used to scroll down one page on the display page.

(3) Up key "▲"

Used to select the previous row in the list;

Used in the digital input page to add one to the current number;

Used to flip up one page on the display page.

(4) OK button

Can be used to enter the next level menu;

Used to move one digit to the right in the input page and to confirm the input content at the last digit;

Can be used for operational confirmation.

2. Shortcut keys

(1) Start shortcut key: Press the "Menu" key while the engine is turned off to wake up the recorder and enter working mode;

(2) Login shortcut key: Press the "▼" key on the default display page to directly log out, making it

convenient for drivers to operate;

(3) USB flash drive data collection shortcut key: Press the "▲" key on the default display page to directly enter the file operation submenu, which facilitates daily data collection.

(4) Printing shortcut key: Press "OK" on the default display page to directly enter the printing submenu and quickly print in national standard format.

(5) Shutdown shortcut key: When the ignition is turned off and the external power is not turned off, press "OK" for 3-5 seconds. After the screen flashes, the recorder will shut down.

3. Printer maintenance

The recorder uses a built-in thermal printer and requires thermal printing paper with a size specification of 25 * 50mm. Users need to power off before changing paper. When changing the paper, first grab the groove of the printing cover and hook it outward to open the printing cover. Then, replace the printing paper roll smoothly, as shown in (printer operation diagram 1); Next, cover the printing cover plate. When covering the printing cover plate, be careful to first cover the top of the printing cover plate, and then cover the bottom of the printing cover plate. The specific operation is shown in Figure 2 of the printer operation diagram.



图 46 打印机操作示意图 1



图 47 打印机操作示意图 2

Figure 46 Printer Operation Diagram 1 Figure 47 Printer Operation Diagram 2

二、行车记录仪（二）

1. 行车记录仪面板

2、 Driving recorder (2)

1. Driving recorder panel

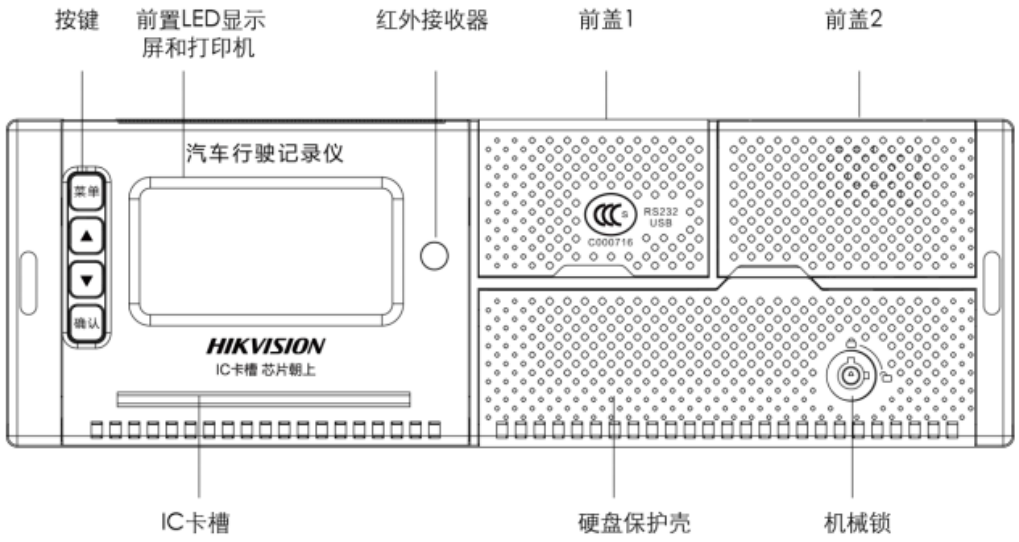

图 48 行车记录仪前面板

Figure 48 Front panel of driving recorder

2. 前面板接口说明

2.Front panel interface description

标识/名称 Identification/Name	说明 describe
按键 key	按“菜单”，进入主菜单或返回当前界面。 Press "菜单" to enter the main menu or return to the current interface.
	●在菜单界面时，按“▲”，可执行光标上移操作。 ●在主界面时，按“▲”可进入定位模块界面。 ●在字符输入界面，按“▲”可清除字符，选中需要的字符后，可完成字符输入。 ●In the menu interface, press "▲" to move the cursor up. ●In the main interface, press "▲" to enter the positioning module interface. ●In the character input interface, press "▲" to clear the characters, and complete the character input after selecting the required characters.
	●在菜单界面时，按“▼”，可执行光标下移操作。 ●在主界面时，按“▼”，可以进入报警信息界面。 ●在字符输入界面，可选择需要输入的字符。 ●In the menu interface, press "▼" to move the cursor down. ●In the main interface, press "▼" to enter the alarm information interface. ●In the character input interface, you can select the characters you want to enter.
	●在光标界面，按“确认”，对选择进行确认。 ●在字符输入界面，按“确认”，可切换输入法，在主界面，长按“确认”，3s 触发

标识/名称 Identification/Name	说明 describe
	打印功能。 ●In the cursor interface, press "确认" to confirm the selection. ●In the character input interface, press "确认" to switch the input method. In the main interface, long press "确认" for 3s to trigger the print function.
前置 LCD 显示屏	●具有显示功能，可进行相关参数配置、状态查询等。 ●内置打印机，在主界面，长按“确认”3s,触发打印功能，也可在“记录仪数据打印”界面，短按“确认”，触发打印功能。 ●With display function, relevant parameter configuration, status query, etc. ●Built-in printer, in the main interface, long press "确认" for 3s to trigger the printing function, or in the "recorder data printing" interface, short press "确认" to trigger the printing function.
前盖 2 Front cover 2	保护 SD 卡槽和 SIM 卡槽，开机前，请务必关闭，若为打开状态，记录仪不能正常开机。 Protect the SD card slot and SIM card slot. Be sure to close them before turning on the device. If they are open, the recorder cannot start up normally.
MIC 孔 MIC hole	用于通话以及电话监听。 Used for communication and phone monitoring.
IC 卡槽 IC card slot	用于插入管理员卡，当插入管理员卡后才可进行 LCD 屏相关操作。 Used for inserting the administrator card, LCD screen related operations can only be performed after inserting the administrator card.
锁止开关 Lock switch	用于固定硬盘盒。 Used to secure the hard drive enclosure.
机械锁 mechanical lock	具有防盗功能，用于保护硬盘、SD 卡、SIM 卡。 Equipped with anti-theft function, used to protect hard drives, SD cards, and SIM cards.

记录仪前面板盖打开后，内部显示如下图所示：

After opening the front panel cover of the recorder, the internal display is shown in the following figure:

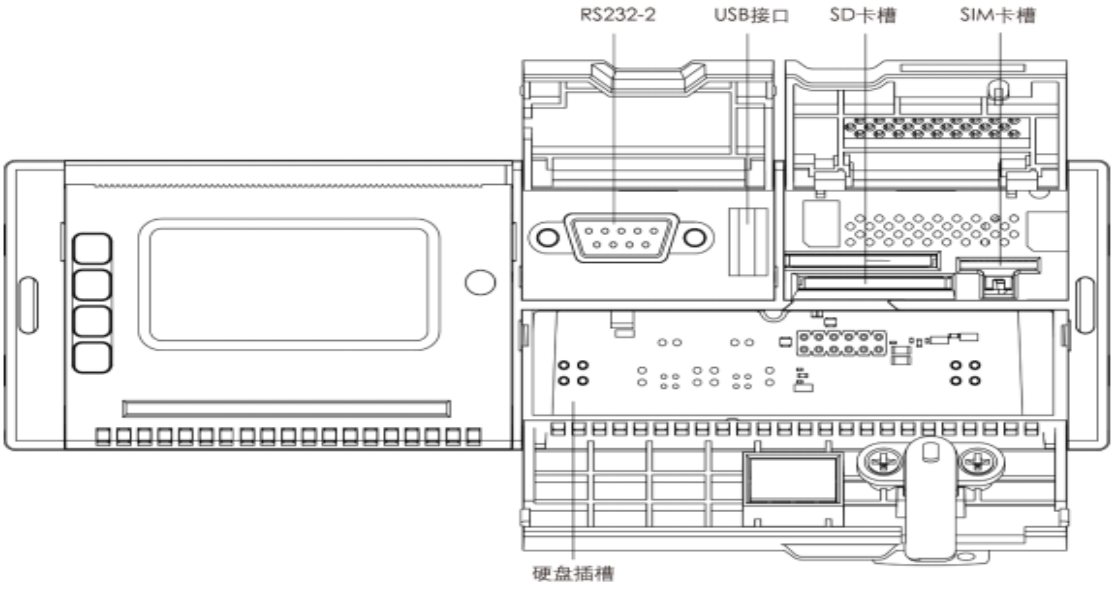

图 49 行车记录仪前面板盖打开内部示意图

Figure 49 Schematic diagram of opening the front panel cover of the driving recorder inside

RS232-2： 用于接外设， 可查询记录仪信息及配置参数。

USB 接口：用于数据备份或接入鼠标进行本地操作。

RS232-2: Used for connecting peripherals, can query recorder information and configuration parameters.

USB interface: used for data backup or connecting to a mouse for local operations.

3. 后面板

3. Rear panel

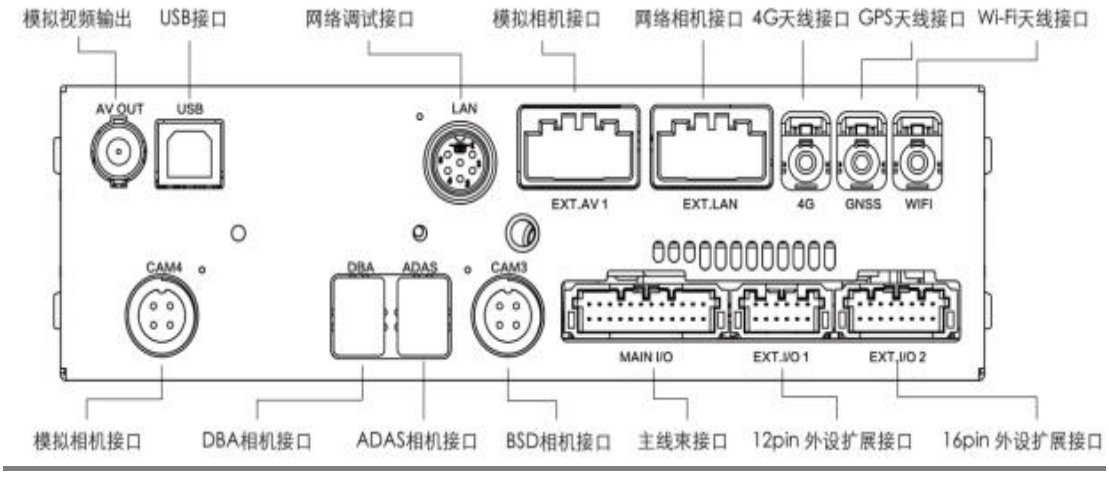

图 50 行驶记录仪后面板接口示意图

Figure 50 Schematic diagram of the interface on the rear panel of the driving recorder

后面板接口说明

Rear panel interface description

标识/名称 Identification/Name	说明 describe	
模拟视频输出 analog video output	CVBS 输出，可查看各路相机图像 CVBS output, allowing viewing of images from various cameras	
USB 接口 USB interface	用于连接 USB type B 接口外设 Used for connecting USB type B interface peripherals	
网络调试接口 Network debugging interface	用于网络调试 Used for network debugging	
模拟相机接口	EXT.AV1	用于接入模拟相机，通过 1 分 2 转接线转接为 2 个 4 芯航空头连接模拟相机 Used to connect to analog cameras, it can be converted into two 4-core aviation heads through a 1/2 adapter cable to connect the analog cameras
	CAM4	用于接入模拟相机，4 芯航空头连接模拟相机 Used for connecting analog cameras, 4-core aviation head connected to analog cameras
网络相机接口 Network camera interface	用于接入网络相机 Used for accessing network cameras	通过 1 分 2 转接线转接为 2 个 6 芯航空头连接网络相机 Connect the network camera to two 6-core aviation heads through a 1/2 adapter cable
4G 天线接口 4G antenna interface	用于连接 4G 天线 Used for connecting 4G antennas	
GPS 天线接口 GPS antenna interface	用于连接 GPS 天线 Used for connecting GPS antennas	
WIFl 天线接口 WIFl antenna interface	用于连接 WIFl 天线 Used for connecting WIFl antennas	
DBA 相机接口 DBA camera interface	连接 DBA 相机 Connect DBA camera	DBA 相机专用接口 DBA camera dedicated interface

标识/名称 Identification/Name	说明 describe	
ADAS 相机接口 ADAS camera interface	连接 ADAS 相机 Connect ADAS camera	ADAS 相机专用接口 ADAS camera dedicated interface
CAM3	BSD 相机 BSD camera	4 芯航空头接口 4-core aviation head interface
主线束接口 Main harness interface	包含电源接口和车身硬线接口 Includes power interface and body hard wire interface	通过主线束甩出 Throw out through the main wire harness
12pin 外设扩展口 12pin peripheral expansion port	用于扩展外设 Used for expanding peripherals	
16pin 外设扩展口 16pin peripheral expansion port	用于扩展外设 Used for expanding peripherals	

4. 安装 SD/SIM 卡、硬盘

(1) **SD 卡位于记录仪前面板，用于存储数据， SD 卡安装步骤如下：**

1) 请按照如图（机械锁打开示意图）所示插入钥匙，并顺时针旋转 90°打开机械锁。

4. Install SD/SIM card and hard drive

(1) The SD card is located on the front panel of the recorder and is used to store data. The installation steps for the SD card are as follows:

1) Please insert the key as shown in the diagram (mechanical lock opening diagram) and turn it clockwise by 90 degrees to open the mechanical lock.

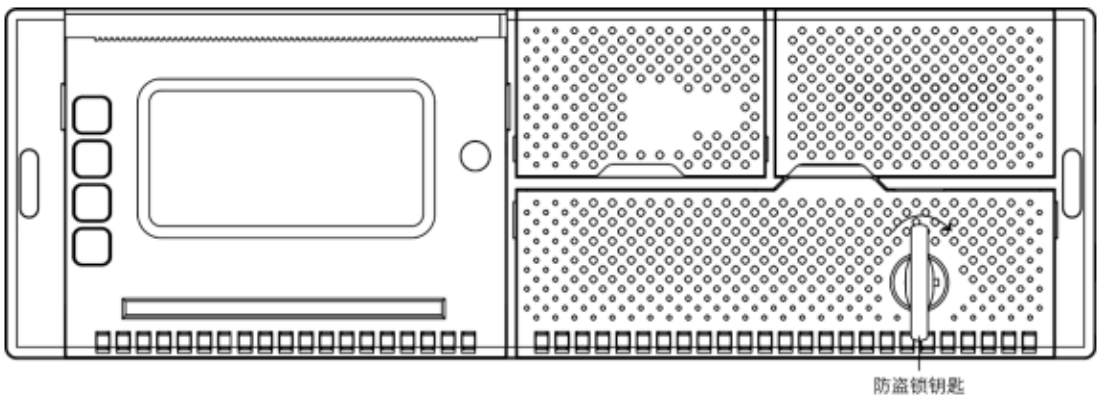

图 51 机械锁打开示意图

Figure 51 Schematic diagram of mechanical lock opening

2)请按照如图（插入 SD 卡示意图）所示插入 SD 卡，轻按 SD 卡至底部，听到咔嚓一声响声后，则表示安装成功。

2) Please insert the SD card as shown in the diagram (insert SD card schematic), lightly press the SD card to the bottom, and hear a clicking sound to indicate successful installation.

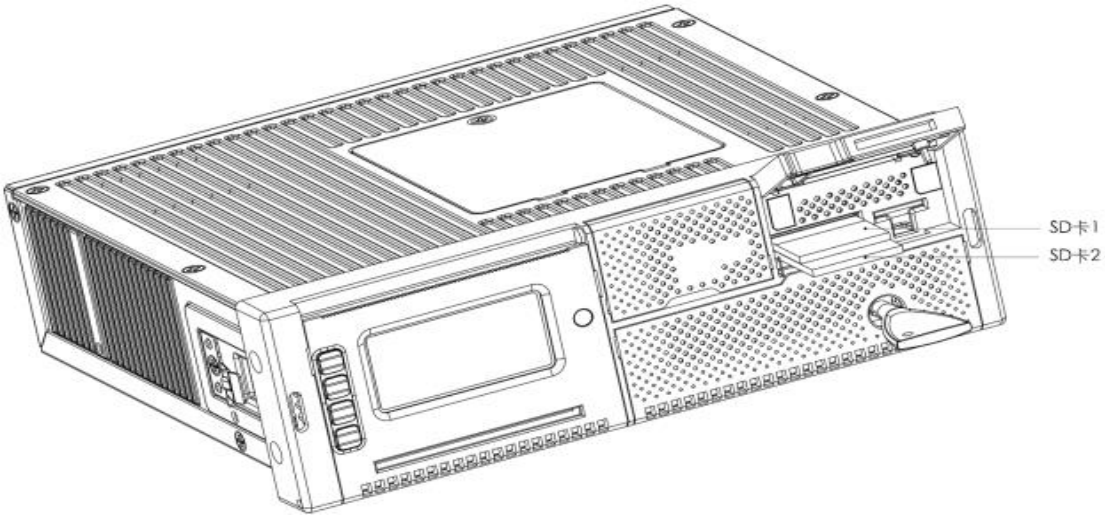

图 52 插入 SD 卡示意图

Figure 52 Schematic diagram of inserting SD card

⚠注意
插拔 SD/SIM 卡前，请先断电。 若需在卡槽 1 处插入 SD 卡，请按照缺口向右，金属片朝下的方式插入，若需在卡槽 2 处插入 SD 卡，则相反。 若需进行定位或导航，请按照相同的方式安装卫星定位天线。 Before plugging in or unplugging SD/SIM cards, please turn off the power first. If you need to insert an SD card into slot 1, please insert it with the notch to the right and the metal plate facing downwards. If you need to insert an SD card into slot 2, do the opposite. If positioning or navigation is required, please install the satellite positioning antenna in the same way.

3)请按照如图（锁防盗保护盖示意图）所示锁紧防盗保护盖：用手沿着箭头 A 指示方向适当用力关闭防盗保护盖，逆时针转动钥匙锁紧防盗保护盖，并拔出钥匙。

3) Please lock the anti-theft protection cover as shown in the diagram (schematic diagram of locking the anti-theft protection cover): use your hand to close the anti-theft protection cover with appropriate force in the direction indicated by arrow A, turn the key counterclockwise to lock the anti-theft protection cover, and remove the key.

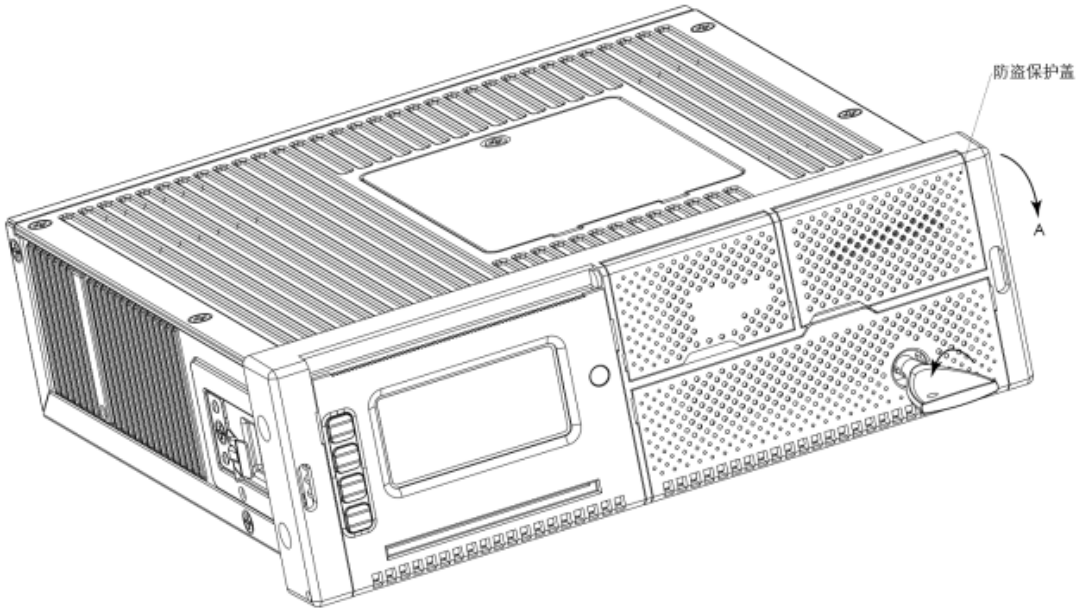

图 53 锁防盗保护盖示意图

Figure 53 Schematic diagram of anti-theft protection cover for lock

4)若您选择使用 3G/4G 功能，请安装 Micro SIM 卡、 3G/4G 天线， Micro SIM 卡槽位于记录仪前面板，天线位于后面板，安装步骤如下：

a.请按照如图（机械锁打开示意图）所示插入钥匙，并顺时针旋转 90°打开机械锁,和 SD 卡操作一致，详细参见 SD 卡操作方法。

b.请按照如图(插入 Micro SIM 卡示意图)所示，将 Micro SIM 卡缺口朝右插入卡槽，并轻按 Micro SIM 卡至底部，听到咔嚓一声响声后，则表示安装成功。

4) If you choose to use the 3G/4G function, please install the Micro SIM card and 3G/4G antenna. The Micro SIM card slot is located on the front panel of the recorder, and the antenna is located on the back panel. The installation steps are as follows:

a. Please insert the key as shown in the diagram (mechanical lock opening diagram) and rotate it clockwise by 90 degrees to open the mechanical lock, which is consistent with the SD card operation. For details, please refer to the SD card operation method.

b. Please insert the Micro SIM card into the slot with the notch facing right as shown in the diagram (schematic diagram of inserting Micro SIM card), and lightly press the Micro SIM card to the bottom. After hearing a clicking sound, it means that the installation is successful.

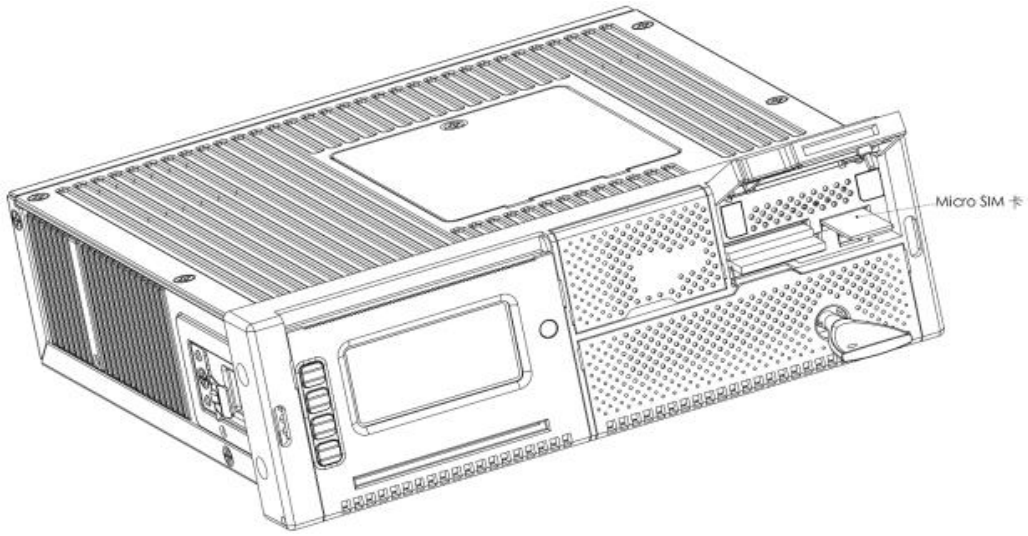

图 54 插入 Micro SIM 卡示意图

Figure 54 Schematic diagram of inserting Micro SIM card

c.请锁紧防盗保护盖，和 SD 卡操作一致，详细参见 SD 卡操作方法。

d.在天线接口处将 3G/4G 天线螺母扭紧即可完成安装。

c. Please lock the anti-theft protection cover, consistent with the SD card operation. For details, please refer to the SD card operation method.

d. Tighten the 3G/4G antenna nut at the antenna interface to complete the installation.

⚠注意
插拔 SD/SIM 卡前，请先断电。 若需进行定位或导航，请按照相同的方式安装卫星定位天线。 Before plugging in or unplugging SD/SIM cards, please turn off the power first. If positioning or navigation is required, please install the satellite positioning antenna in the same way.

(2) 安装硬盘操作方法：

a. 将硬盘锁钥匙插入防盗锁后，顺时针转动 90°打开防盗锁（详见：机械锁打开示意图）。

b. 通过扣手位将硬盘保护盖沿着箭头 B 方向打开，如图（打开硬盘保护盖示意图）所示。

(2) Instructions for installing a hard drive:

a. After inserting the hard drive lock key into the anti-theft lock, turn it clockwise by 90 degrees to open the anti-theft lock (see: Mechanical lock opening diagram for details).

b. Open the hard drive protection cover in the direction of arrow B through the buckle position, as shown in the diagram (schematic diagram of opening the hard drive protection cover).

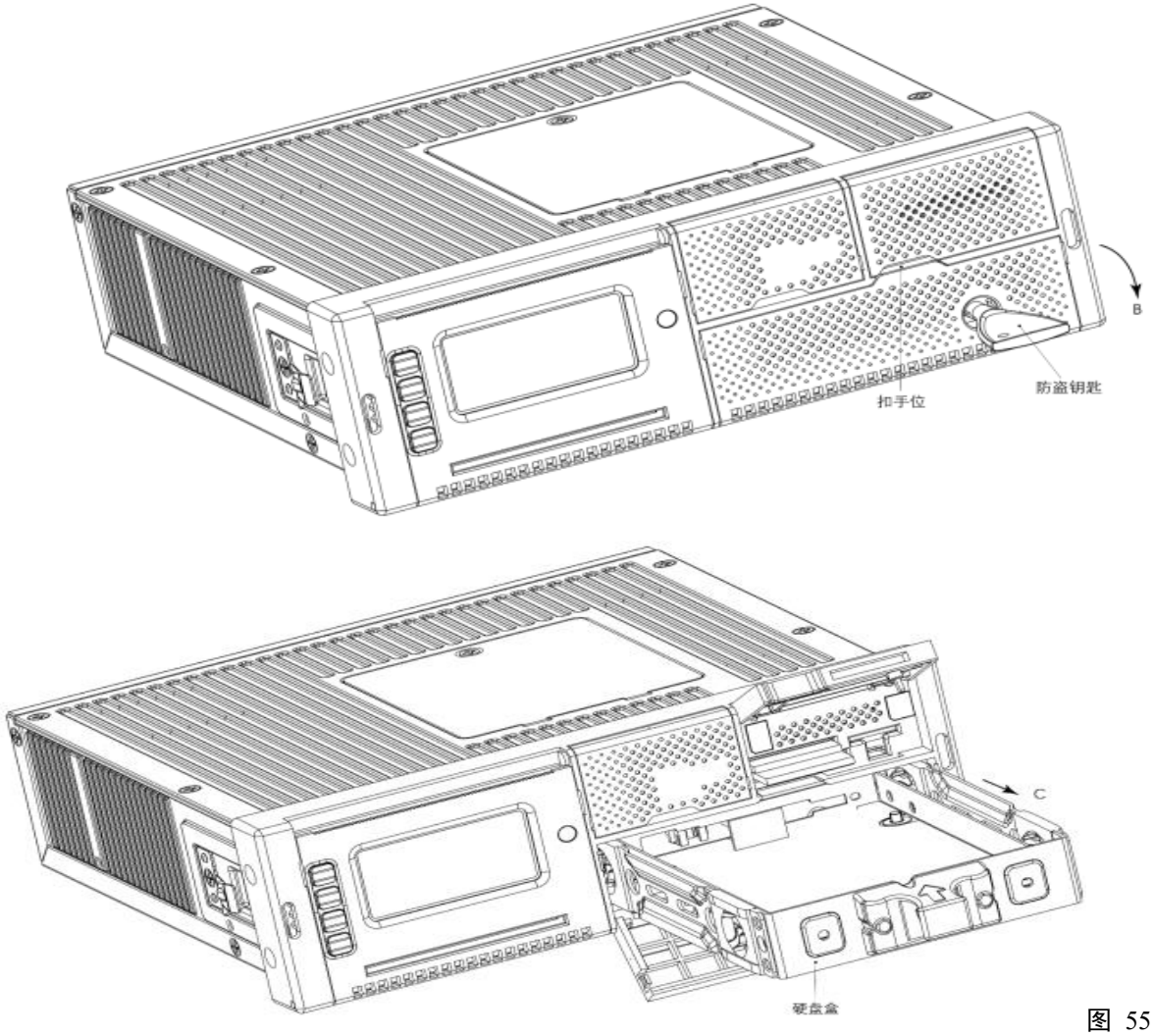

图 55 打开硬盘保护盖示意图

Figure 55 Schematic diagram of opening the hard disk protection cover

c. 拔出硬盘盒： 沿着箭头 C 的方向拔出硬盘盒，如图（拔出硬盘盒示意图）所示。

c. Pull out the hard drive box: Pull out the hard drive box in the direction of arrow C, as shown in the diagram (schematic diagram of pulling out the hard drive box).

图 56 拔出硬盘盒示意图

Figure 56 Schematic diagram of unplugging the hard drive enclosure

d.插入硬盘：将硬盘倾斜放入硬盘盒，并将沿着箭头 D 的方向向前推，当和 SATA 连接座接触时停止，将硬盘水平装入硬盘盒，如图（插入硬盘示意图）所示。

d. Insert hard drive: Tilt the hard drive into the hard drive enclosure and push it forward in the direction of arrow D. Stop when it contacts the SATA connector and insert the hard drive horizontally into the hard drive enclosure, as shown in the diagram (schematic diagram of inserting hard drive).

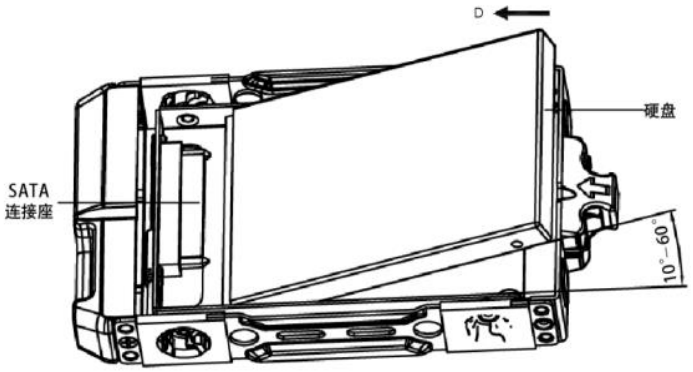

图 57 插入硬盘示意图

Figure 57 Schematic diagram of inserting a hard drive

e.固定硬盘：将硬盘盒翻转到反面，适当调节硬盘位置，使硬盘安装孔与硬盘盒安装孔对齐，并用 4 颗 SC-KM3X5B-FMF 规格螺丝将硬盘固定好，如图（固定硬盘示意图）所示。

e. Fixed hard drive: Flip the hard drive case to the back, adjust the position of the hard drive appropriately, align the hard drive mounting hole with the hard drive case mounting hole, and fix the hard drive with 4 SC-KM3X5B-FMF screws, as shown in the diagram (schematic diagram of fixed hard drive).

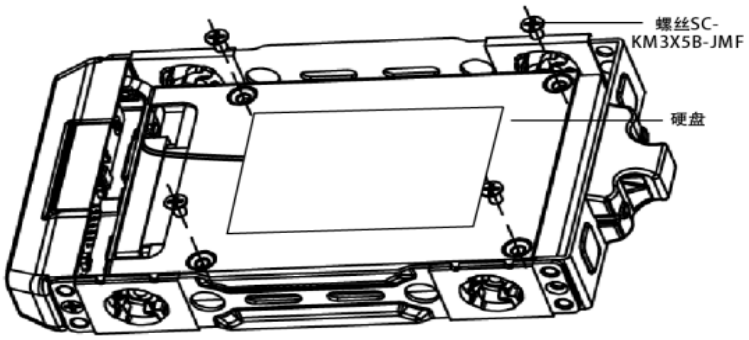

图 58 固定硬盘示意图

Figure 58 Schematic diagram of fixed hard drive

f.将装好硬盘的硬盘盒，带箭头符号面朝上，沿箭头方向插入记录仪，如（插回硬盘盒示意图）所示。

f. Insert the recorder into the hard drive enclosure with the arrow symbol facing upwards, following the direction of the arrow, as shown in the schematic diagram of inserting it back into the hard drive enclosure.

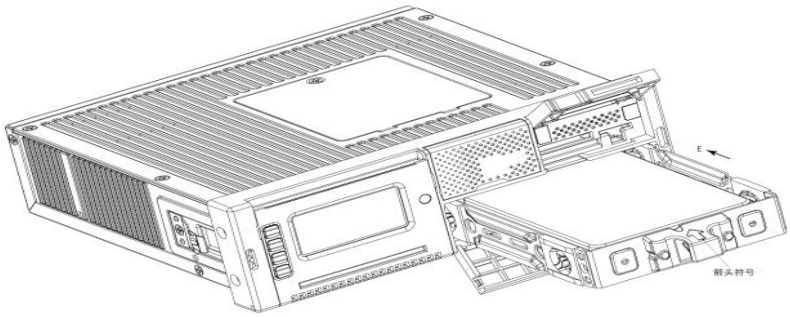

图 59 插回硬盘盒示意图

Figure 59 Schematic diagram of inserting back into the hard drive box

g.将硬盘保护盖关闭，并将防盗锁钥匙插入防盗锁，逆时针旋转 90°锁住保护盖，拔出防盗锁钥匙，安装完成。

g. Close the hard drive protective cover and insert the anti-theft lock key into the anti-theft lock. Rotate counterclockwise by 90 degrees to lock the protective cover, remove the anti-theft lock key, and the installation is complete.

示例三：行车记录仪

Example 3: Driving recorder



图 60 记录仪示意图（选装）

Figure 60 Schematic diagram of recorder (optional)

VDO 记录仪：具体操作见零部件使用手册

VDO recorder: For specific operations, please refer to the component manual

2.3.15.电子钟

2.3.15. Electronic Clock



图 61 电子钟示意图



图 62 电子钟示意图

Figure 61 Schematic diagram of electronic clock　Figure 62 Schematic diagram of electronic clock

本节主要介绍电子钟的功能、调节方法及注意事项，图片仅为示意，车型配置不同，具体型号可能不同。请注意及时检查镜面的角度、清洁度，若不合适，及时调整、清洁。

1.　电子钟开启及关闭

打开电源总开关，点火钥匙置于 ON 档，电子钟即自动显示时间。

点火钥匙置于 OFF 档，电子钟即自动关闭。

2.　电子钟调节

在电子钟开启状态下，位于电子钟背部的两个按钮，上面的“H”按钮用于调节小时，下面的“M”按钮用于调节分钟，调到所需要的正确时间。

This section mainly introduces the functions, adjustment methods, and precautions of electronic clocks. The pictures are for illustration only, and the specific models may vary depending on the vehicle configuration. Please pay attention to checking the angle and cleanliness of the mirror surface in a timely manner. If it is not suitable, adjust and clean it in a timely manner.

1. Electronic clock on and off

Turn on the main power switch, place the ignition key in the ON position, and the electronic clock will automatically display the time.

Turn the ignition key to the OFF position, and the electronic clock will automatically turn off.

2. Electronic clock adjustment

When the electronic clock is turned on, there are two buttons located on the back of the clock. The "H" button on the top is used to adjust the hour, and the "M" button on the bottom is used to adjust the minute to the correct time required.

2.3.16.空调面板

2.3.16. Air conditioning panel

一、示例一

1、 Example 1



图 63 空调面板示意图

Figure 63 Schematic diagram of air conditioning panel

1. 面板按键操作说明

1.Panel button operation instructions

电源开关 **power switch** 	在控制面板电源接通状态下，按该开关，实现对空调系统的开启和关闭。蜂鸣器提示音提示操作有效。 When the control panel is powered on, press the switch to turn on and off the air conditioning system. The buzzer sound indicates that the operation is effective.
自动模式开关 **Automatic mode switch** 	用于空调系统的自动模式的转换。 在系统开机正常的状态下，按下该开关，进入自动模式，在此模式下，风量、新风和压缩机均自动运行，显示屏显示“AUTO”图标。蜂鸣器提示操作有效。 Automatic mode conversion for air conditioning systems. When the system is turned on normally, press the switch to enter automatic mode. In this mode, the air volume, fresh air, and compressor all run automatically, and the display screen shows the "AUTO" icon. The buzzer prompts that the operation is valid
手动制冷模式开关 **Manual cooling mode switch** 	用于空调系统的手动制冷模式的转换。 在系统开机正常的状态下，按下该开关，进入手动制冷模式，用户自行调整风量、设定温度和新风开度，同时显示屏显示制冷图标以及用户设定的各种工作状态图标。蜂鸣器提示音提示操作有效。 Conversion of manual cooling mode for air conditioning systems. When the system is turned on normally, press the switch to enter manual cooling mode. Users can adjust the air volume, set temperature, and fresh air opening by themselves. At the same time, the display screen shows the cooling icon and various working status icons set by the user. The buzzer sound indicates that the operation is effective.

手动制热模式开关 **Manual heating mode switch** 	用于空调系统的手动制热模式的转换。 在系统开机正常的状态下，按下该开关，进入手动制热模式，用户自行调整风量、设定温度和新风开度，同时显示屏显示制冷图标以及用户设定的各种工作状态图标。蜂鸣器提示音提示操作有效。 Conversion of manual heating mode for air conditioning systems. When the system is turned on normally, press the switch to enter manual heating mode. The user can adjust the air volume, set temperature, and fresh air opening by themselves. At the same time, the display screen shows the cooling icon and various working status icons set by the user. The buzzer sound indicates that the operation is effective.
通风模式开关 **Ventilation mode switch** 	用于空调系统的通风模式的转换。 在系统开机正常的状态下，按下该开关，系统转入通风模式，用户自行调整风量大小和新风状态，系统依照用户设定的风量状态进行通风运行，同时显示屏显示用户设定的各种工作状态图标。蜂鸣器提示音 提示操作有效。 Conversion of ventilation modes for air conditioning systems. When the system is turned on normally, press the switch to enter the ventilation mode. The user can adjust the air volume and fresh air status by themselves. The system will operate according to the air volume status set by the user, and the display screen will show various working status icons set by the user. The buzzer sound indicates that the operation is effective.
新风开关 **Fresh air switch** 	用于空调系统的新风状态（包括开、关）的转换 在系统开机正常的状态下，循环按该按键，切换空调系统的新风开、关。蜂鸣器提示音提示操作有效。 Conversion of fresh air status (including on/off) for air conditioning systems In the normal startup state of the system, press the button repeatedly to switch the fresh air on/off of the air conditioning system. The buzzer sound indicates that the operation is effective.

温度设定开关 **Temperature setting switch** 	用于车内目标温度的设定。 按下该两按钮，设定的温度上升或下降 1℃，直到最大或最小设定值。 蜂鸣器提示音提示操作有效。 Used for setting the target temperature inside the car. Press these two buttons to increase or decrease the set temperature by 1 ℃ until the maximum or minimum set value is reached. The buzzer sound indicates that the operation is effective.
风量设定开关 **Air volume setting switch** 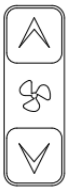	用于对风量的设定。 按下该两按钮，可以设定风量从小到大或从大到小调节，直到最大或最小设定值。 在自动模式下，系统将依照车内和设定温度的比较，自动决定风量的大小，用户不需要对风量自行设定。蜂鸣器提示音提示操作有效。 Used for setting the air volume. Pressing these two buttons allows you to adjust the air volume from small to large or from large to small, up to the maximum or minimum set value. In automatic mode, the system will automatically determine the air volume based on the comparison between the car interior and the set temperature, and users do not need to set the air volume themselves. The buzzer sound indicates that the operation is effective.

2. 面板显示说明

2. Panel display instructions

显示屏 **display** 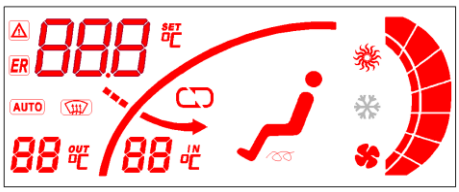	显示屏可以完整的显示各种信息，诸如车内温度、车外温度、设定温度、风量、工作模式、新风状态（包括开、关）等；显示各种故障代码指示。 The display screen can fully display various information, such as interior temperature, exterior temperature, set temperature, air volume, working mode, fresh air status (including on/off), etc; Display various fault code indications.

自动制冷模式显示 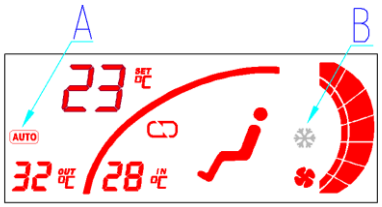 Automatic cooling mode display	初次开启空调系统或按下 AUTO 按键，进入自动制冷模式，“A”、“B”处点亮，当“B”处指示灯显白色时指示压缩机在工作，当显橙色时，表示制冷等待，压缩机不工作。 Turn on the air conditioning system or press the button AUTO to enter the automatic cooling mode. The "A" and "B" lights up. When the indicator light at "B" turns white, it indicates that the compressor is working. When it turns orange, it indicates that the cooling is waiting and the compressor is not working.
手动制冷模式显示 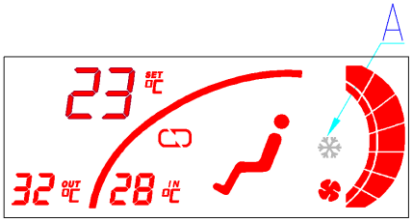 Manual cooling mode display	通过按下 ❄ 按键，系统切换到手动制冷模式，“A”处点亮，指示空调系统处于手动制冷模式，当该指示灯显白色时指示压缩机在工作，当显橙色时，表示制冷等待，压缩机不工作。 By pressing the button ❄, the system switches to manual cooling mode. The light at "A" indicates that the air conditioning system is in manual cooling mode. When the indicator light turns white, it indicates that the compressor is working. When it turns orange, it indicates that the cooling is waiting and the compressor is not working.
手动制热模式显示 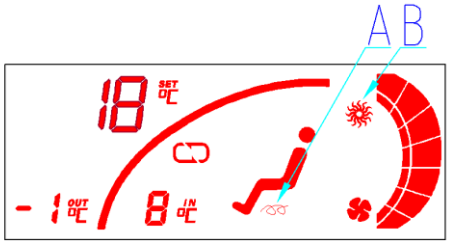 Manual heating mode display	按下 AUTO 按键（当设定温度较高时）或者通过按下 ☼ 按键，系统切换到制热模式，“A”、“B”处点亮。当“A”处指示灯常亮时指示 PTC 加热器开启，闪烁时指示 PTC 加热器关闭；当“B”处指示灯显红色时指示压缩机在工作，当显橙色时表示制热等待，压缩机不工作。

	Press the button (when the set temperature is high) or by pressing the button, the system switches to heating mode, and lights up at "A" and "B". When the indicator light at "A" is constantly on, it indicates that the PTC heater is turned on, and when it flashes, it indicates that the PTC heater is turned off; When the indicator light at "B" turns red, it indicates that the compressor is working. When it turns orange, it means waiting for heating and the compressor is not working.
通风模式显示 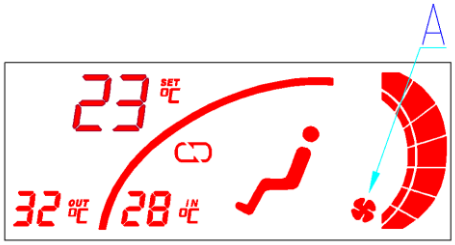 Ventilation mode display	通过按下按键，系统切换到通风模式，仅“A”处的图标保留显示，指示系统处于通风模式。 By pressing the button , the system switches to ventilation mode, with only the icon at "A" remaining displayed, indicating that the system is in ventilation mode.
新风状态显示 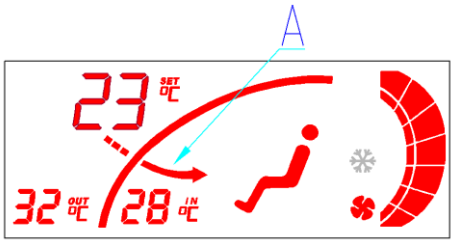 Fresh air status display	通过按下按键，新风打开，“A”处点亮，循环按下该开关，可改变新风状态（包括开、关）。 By pressing the button , the fresh air is turned on, and the "A" position lights up. Repeatedly pressing the switch can change the status of the fresh air (including on and off).
内循环状态显示 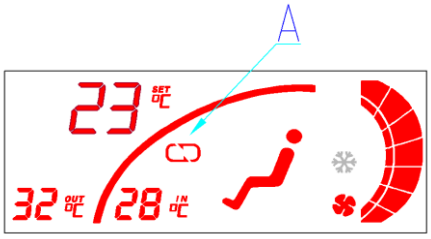 Internal circulation status display	循环按下按键，当新风关闭时，“A”处点亮，指示空调系统处于内循环模式。 Press the button repeatedly, and when the fresh

	air is turned off, the light at "A" indicates that the air conditioning system is in internal circulation mode.
除霜状态显示 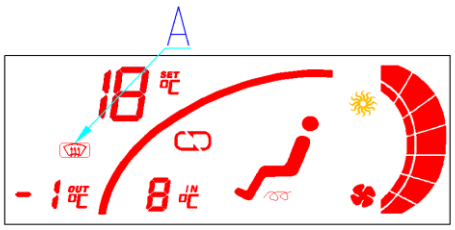 **Defrosting status display**	如开始除霜运行，则“A”处指示灯点亮，除霜结束后，自动熄灭。 If defrosting operation starts, the indicator light at "A" will light up, and it will automatically turn off after defrosting is completed.
风量显示 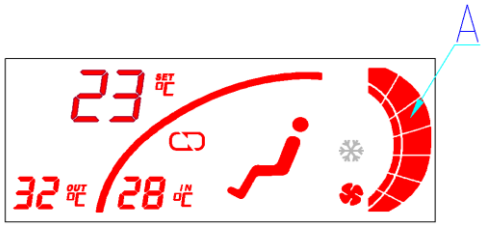 **Air volume display**	在任何模式下，“A”处指示风量状态。 In any mode, "A" indicates the airflow status.
设定温度显示 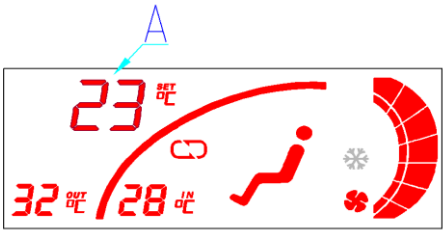 **Set temperature display**	在正常工作状态下，“A”处显示设定温度 Under normal working conditions, the set temperature is displayed at "A"
车内温度显示 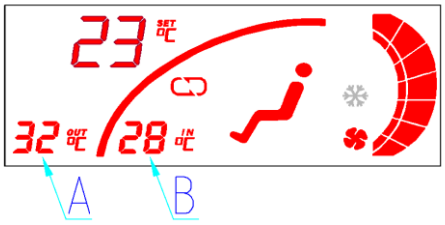 **Temperature display inside the car**	正常工作状态下，“A”处显示车内的温度。 车内温度显示范围：-40℃-70℃ (高于显示范围显示“Hi”，低于显示范围显示“Lo”) Under normal working conditions, the temperature inside the car is displayed at "A". Temperature display range inside the car: -40 ℃ -

	70 ℃ (Display "Hi" above the display range and "Lo" below the display range)
故障显示 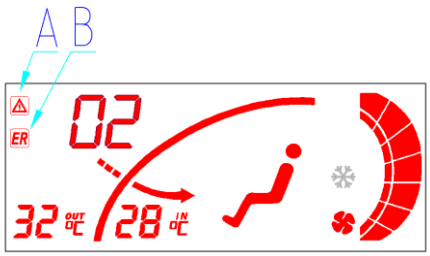 	正常运行状态下，如系统出现故障则“B”处点亮，但系统的部分功能仍可能运行，设定温度显示区自动显示故障代码。 如发生影响压缩机的故障，则“A”和“B”处同时点亮。（表明系统出现影响运行的严重故障） Under normal operating conditions, if the system malfunctions, the "B" position will light up, but some functions of the system may still operate, and the temperature display area will automatically display the fault code. If a fault occurs that affects the compressor, both "A" and "B" will light up simultaneously. (Indicating a serious malfunction affecting the operation of the system)

3. 空调按键第二功能说明

当车载空调集成动力电池冷却功能时，空调面板在空调关机状态下具有按键第二功能，具体使用操作如下：

(1)强制水泵启动功能（用于加防冻液）：在面板关机状态下，同时长按通风键+新风键（单冷面板长按新风键+自检）3 秒以上（无论 BMS 发送何种工作模式，无论是否收到 BMS 报文），仅水泵输出线输出 24V，其它线均不输出，且面板自循环灯亮；

(2)再次同时长按通风键+新风键（单冷面板长按新风键+自检）三秒以上，水泵输出线停止输出，面板自循环灯灭。

(3)在面板开机状态下，此功能无效。

(4)在此功能下，如果水泵反馈故障，不用处理，水泵输出线仍然输出。

3. Description of the second function of the air conditioning button

When the car air conditioner integrates the power battery cooling function, the air conditioning panel has a second button function when the air conditioner is turned off. The specific operation is as follows:

(1) Forced water pump start function (for adding antifreeze): When the panel is turned off, press and hold the

ventilation button+fresh air button (press and hold the fresh air button+self-test on the single cooling panel) for more than 3 seconds (regardless of the working mode sent by BMS or whether BMS messages are received), only the water pump output line outputs 24V, and other lines do not output, and the panel self circulation light is on;

(2) Press and hold the ventilation button and fresh air button simultaneously again (press and hold the fresh air button and self-test on the single cooling panel) for more than three seconds, the water pump output line will stop outputting, and the panel self circulation light will turn off.

(3) This function is invalid when the panel is turned on.

(4) Under this function, if the water pump feedbacks a fault, there is no need to handle it, and the water pump output line still outputs.

4. 故障报警说明

4. Fault alarm explanation

故障代码 Fault code	故障名称 Fault name	故障原因 Reason for malfunction
Er-00	通讯故障 Communication Failure	面板与电控盒间的 CAN 通讯出现了故障 10 秒 The CAN communication between the panel and the electrical control box has malfunctioned for 10 seconds
Er-01	欠电压故障 Undervoltage fault	检测到的电压小于 DC21±1V，且持续的时间大于 3 秒钟 The detected voltage is less than DC21 ± 1V and lasts for more than 3 seconds
Er-02	过电压故障 Overvoltage fault	检测到的电压大于 DC32±1V，且持续的时间大于 3 秒钟 The detected voltage is greater than DC32 ± 1V and lasts for more than 3 seconds
Er-03	系统低压故障 System low voltage fault	空调系统压缩机运行时，在制冷模式下，当系统冷媒压力低于设定值 3 秒钟 When the air conditioning system compressor is running in cooling mode, if the system refrigerant pressure is lower than the set value for 3 seconds
Er-04	蒸发器温度传感器故障 Evaporator temperature sensor	故障出现表明电控盒未收到来自蒸发器传感器的信号

故障代码 Fault code	故障名称 Fault name	故障原因 Reason for malfunction
	malfunction	The occurrence of a fault indicates that the electrical control box has not received a signal from the evaporator sensor
Er-05	车内温度传感器故障 Car interior temperature sensor malfunction	故障出现表明电控盒未收到来自车内温度传感器的信号 The occurrence of a fault indicates that the electronic control box has not received a signal from the temperature sensor inside the vehicle
Er-07	系统高压故障 System high voltage fault	空调压缩机运行时，当系统冷媒压力高于设定值 3 秒钟 When the air conditioning compressor is running, if the system refrigerant pressure is higher than the set value for 3 seconds
Er-08	车外温度传感器故障 External temperature sensor malfunction	故障出现表明电控盒未收到来自车外温度传感器的信号 The occurrence of a fault indicates that the electronic control box has not received a signal from the outside temperature sensor of the vehicle
Er-09	压缩机高温故障 Compressor high temperature fault	空调系统压缩机运行时，当压缩机排气口温度高于设定值 When the compressor of the air conditioning system is running, if the outlet temperature of the compressor is higher than the set value
Er-10	变频器故障 Inverter fault	面板检测到变频器故障检测线与地断开 The panel detects that the fault detection line of the frequency converter is disconnected from the ground
Er-11	PTC1 出风温度传感器故障 PTC1 outlet air temperature sensor	电控盒未收到来自该温度传感器的信号 The electronic control box has not received a signal

故障代码 Fault code	故障名称 Fault name	故障原因 Reason for malfunction
	malfunction	from the temperature sensor
Er-12	PTC2 出风温度传感器故障 PTC2 outlet air temperature sensor malfunction	电控盒未收到来自该温度传感器的信号 The electronic control box has not received a signal from the temperature sensor
Er-13	吸气温度传感器故障 Inhalation temperature sensor malfunction	电控盒未收到来自该温度传感器的信号 The electronic control box has not received a signal from the temperature sensor
Er-14	压力传感器故障 Malfunction of pressure sensor	电控盒未收到来自该温度传感器的信号 The electronic control box has not received a signal from the temperature sensor
Er-20	集成电源（变频器）通讯故障 Communication failure of integrated power supply (frequency converter)	集成电源（变频器）与电控盒间的 CAN 通讯出现了故障 10 秒 The CAN communication between the integrated power supply (frequency converter) and the electronic control box has malfunctioned for 10 seconds
Hi		温度传感器超出显示范围，高于显示范围显示“Hi” The temperature sensor exceeds the display range and displays "Hi" above the display range
Lo		温度传感器低于显示范围，低于显示范围显示“Lo” 温度传感器低于显示范围，低于显示范围显示“Lo”

二、示例二

2、 Example 2



图 64 空调面板示意图

Figure 64 Schematic diagram of air conditioning panel



1. 开/关键
2. 上调键
3. 下调键
4. 蒸发风机速度
5. 制冷模式激活
6. 制热模式激活
7. 内循环模式激活
8. 故障报警指示
9. 自动模式激活
10. 外部环境温度
11. 蒸发风机按键
12. 蒸发风机状态指示灯
13. 新风/再循环按键
14. 新风/再循环状态指示灯
15. 自动模式按键
16. 自动模式状态指示灯
17. 设定温度

1、基本操作：

(1) **查看模式**：查系统只读值（温度探头及高低压力值）

同时长按  和  键 2 秒，进入如下 d001 界面：

1. Basic operation:

(1) Viewing mode: Check system read-only values (temperature probe and high/low pressure values)

Simultaneously press and hold the keys  and  for 2 seconds to enter the d001 interface as follows:



可依此查看 d001 到 d007 的值；对应表格如下：

You can use this to view the values from d001 to d007; The corresponding table is as follows:

d001	车内温度 Interior temperature	0.1℃
d002	车外环境温度 External ambient	0.1℃
d003	风道温度 Air duct temperature	0.1℃
d004	系统高压 System high voltage	0.1 bar
d005	系统低压 System low voltage	0.1℃
d006	进水温度 Inlet water temperature	0.1℃
d007	出水温度 Outlet water temperature	0.1℃

长按 AUTO 退出此模式。

Long press AUTO to exit this mode.

(2) 参数设置模式

在面板关闭下，同时长按和键 2 秒，进入输入密码界面；如下图

(2) Parameter setting mode

Press and hold the and keys and simultaneously for 2 seconds while the panel is closed to enter the password input interface; As shown in the following figure

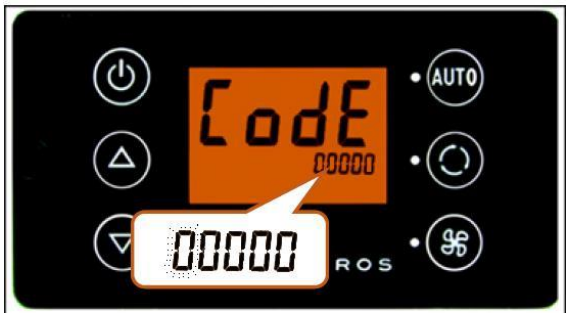

此时需要输入密码，密码为 83240，通过 和 键，调整密码输入对应的位置，对应的输入位置会不停的闪烁（000000 位置）。通过上调键 ，下调键 调整数字大小（0～9）。按 键确认密码。密码正确无误后，如下图：

At this point, you need to enter a password, which is 83240. Use the AND keys and to adjust the password input to the corresponding position, and the corresponding input position will continuously flash (000000 position). Adjust the number size (0-9) by pressing the up and down keys . Press the button to confirm the password. After the password is correct, as shown in the following figure:

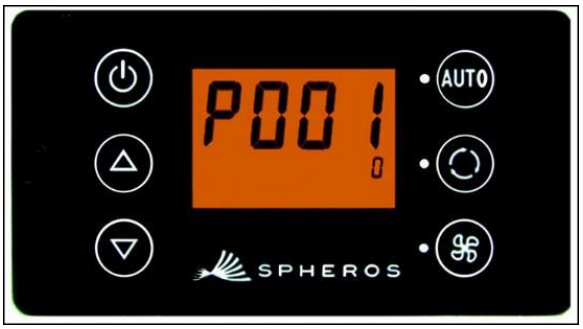

通过上调键 ，下调键 调整要修改的 P001-P128 参数号。通过 和 键，增加或减少要修改的参数值，按 键保存此次修改。长按 退出此模式。

Adjust the P001-P128 parameter numbers to be modified by pressing the up and down keys. Use the AND key and to increase or decrease the parameter value to be modified, and press the key to save the modification. Long press to exit this mode.

⚠注意
未经授权请不要擅自修改 P 参数，负责会引起系统故障。 Please do not modify the P parameter without authorization, as it may cause system failure.

(3) 查看系统故障

当控制器中出现⚠，意味着系统中发生故障；

(3) Check system faults

When it appears in the controller, it means that a fault has occurred in the system;



若需要查看具体故障需如下操作：

同时按 和 2 秒，会显示如下

If you need to view specific faults, you need to follow these steps:

Press and hold simultaneously and for 2 seconds, and the following will be displayed



Er 7 代表报警号；1 代表报警次数。

通过上调键，下调键可以查看已发生和正在发生的报警。进入界面后，按 键复位报警，如果报警依然存在，其报警值复位为 1，如果报警消失，只是记录故障，其值复位为零；如果所有报警都被排除，按 键会显示如下内容：

Er 7 represents the alarm number; 1 represents the number of alarms.

By pressing the up and down keys, you can view alarms that have occurred or are currently occurring. After entering the interface, press the button to reset the alarm. If the alarm still exists, its alarm value will be reset to 1. If the alarm disappears and only a fault is recorded, its value will be reset to zero; If all alarms are

eliminated, the button AUTO will display the following content:



报警列表如下:

The alarm list is as follows:

故障代码 Fault code	故障排除 Troubleshooting
E05	环境温度传感器故障 Environmental temperature sensor malfunction
E06	风道温度传感器故障 Fault in air duct temperature sensor
E07	车内温度传感器故障 Car interior temperature sensor malfunction
E09	高压传感器故障 High voltage sensor malfunction
E10	低压传感器故障 Low pressure sensor malfunction
E19	低压低于 16V,或高压高于 32V;恢复电压分别为高于 28V 和低于 30V
E20	变频器反馈错误，或低压软开关触发 25 秒 Inverter feedback error, or low-voltage soft switch triggered for 25 seconds
E22	存在 EDS 故障，同时不存在高压或低压故障 There is an EDS fault, and there is no high or low voltage fault
E24	有 EDS 故障，同时高压高于 30bar；当高压低于 29bar 且没有 EDS 故障时恢复 There is an EDS malfunction, and the high pressure is higher than 30 bar; Recovery when high pressure is below 29 bar and there is no EDS fault

故障代码 Fault code	故障排除 Troubleshooting
E25	有 EDS 故障且低压低于 2bar,或者软开关(低压小于 1.2 且持续 22 秒，或者低压小于 0.8bar)被触发；当低压高于 3bar,且没有 EDS 故障时恢复 There is an EDS fault and the low pressure is below 2 bar, or the soft switch (low pressure less than 1.2 and lasts for 22 seconds, or low pressure less than 0.8 bar) is triggered; When the low voltage is higher than 3bar and there is no EDS fault, restore
E26	高低压差是否超出范围 Does the high and low pressure difference exceed the range
E28	结霜故障(制冷模式下) Frosting fault (in cooling mode)
E30	高压低于 500V 或高于 740V；当高于 510 且低于 730V 时恢复 High voltage below 500V or above 740V; When it is higher than 510 and lower than 730V, restore
E35	PTC 温度过高 PTC temperature too high

长按 AUTO 退出此模式

long press AUTO to exit this mode

(4) 水泵强制开启模式

在面板关闭下，同时长按 △ 和 ▽ 键 2 秒，即可开启水泵。长按 ⏻ 关闭水泵。

(4) Forced opening mode of water pump

Press and hold the △ and ▽ keys simultaneously for 2 seconds while the panel is closed to turn on the water pump. Press and hold ⏻ to turn off the water pump.

⚠ 警告

- 根据车型配置不同，空调品牌/型号可能不同，详见随车空调使用说明书。
- 如果空调操作面板上出现故障报警时，请及时将空调关闭，并尽快联系空调厂家。
- 客车熄火前，需要先关闭空调，然后再关闭整车电源，否则容易引起压缩机故障。
- According to different vehicle configurations, the brand/model of air conditioning may vary. Please refer to the accompanying air conditioning user manual for details.
- If there is a fault alarm on the air conditioning operation panel, please turn off the air conditioning in a timely manner and contact the air conditioning manufacturer as soon as possible.
- Before turning off the bus, it is necessary to turn off the air conditioning first, and then turn off the

警告
power supply of the entire vehicle, otherwise it may cause compressor failure.

2.3.17.录像监控系统

2.3.17. Video surveillance system



图 65 录像监控系统示意图

Figure 65 Schematic diagram of video surveillance system

录像监控系统是保护驾驶员及乘客安全的保护系统，实时监控车内情况，录像并传输至后台，为驾驶员和乘客提供安全保障。

打开钥匙录像监控系统自动工作，钥匙关闭，录像监控系统自动存储录像内容。

The video surveillance system is a protective system that protects the safety of drivers and passengers. It monitors the situation inside the car in real time, records and transmits it to the background, providing safety protection for drivers and passengers.

Turn on the key and the video surveillance system will automatically work. When the key is turned off, the video surveillance system will automatically store the recorded content.

注意
图片仅为示意，车型配置不同，具体型号可能不同，详见随车录像监控系统使用说明书。 The pictures are for illustration only. The specific model may vary depending on the vehicle configuration. Please refer to the user manual of the onboard video surveillance system for details.

2.3.18.车内外路牌及控制器

2.3.18. Road signs and controllers inside and outside the vehicle



图 66 路牌示意图　　图 67 路牌示意图二

Figure 66 Schematic diagram of road signs　Figure 67 Schematic diagram of road signs II



图 68 电子路牌控制器示意图（一）选装

Figure 68 Schematic diagram of electronic road sign controller (1) Optional

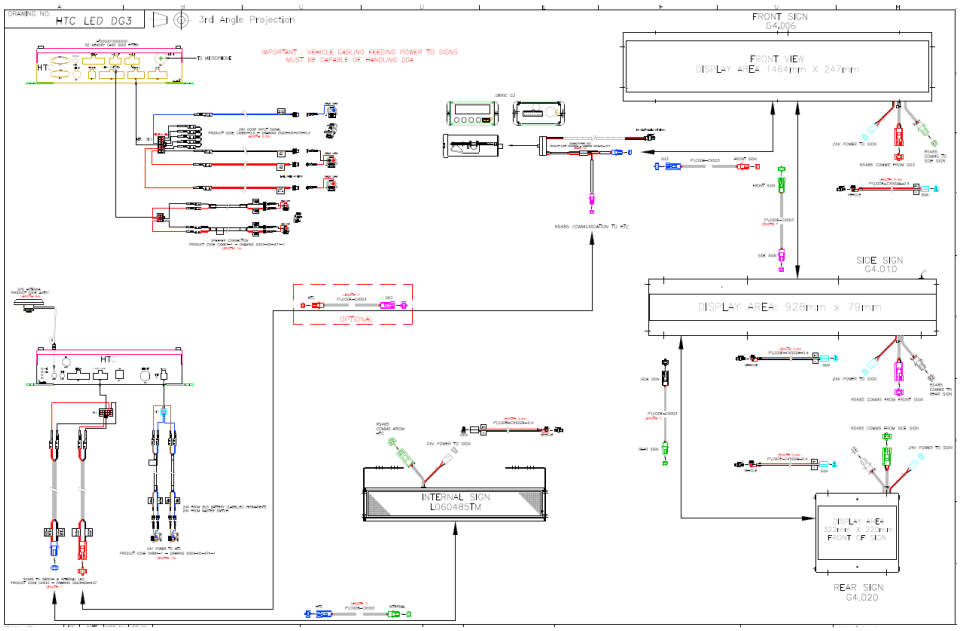

图 69 电子路牌连接原理图

Figure 69 Schematic diagram of electronic road sign connection

车辆常规前、后或侧面安装有电子路牌，朝向车外显示路线、到站信息等，车内视配置情况或安装内显示屏用于显示路线信息等，由翘板开关“  ”控制开启和关闭。路牌控制器用于控制车内外显示屏内容，实现线路编号、线路调整等。因车辆配置不同，具体安装情况以实车为准。

The vehicle is equipped with electronic road signs on the front, rear, or side, which display route and arrival information towards the outside of the vehicle. Inside the vehicle, depending on the configuration or installation of an internal display screen, it is used to display route information and is controlled to turn on and off by a toggle switch . The road sign controller is used to control the content of the display screens inside and outside the vehicle, and to achieve route numbering, route adjustment, etc. Due to different vehicle configurations, the specific installation situation shall be subject to the actual vehicle.


为了行人及车辆的安全，请务必在车辆行驶过程中关闭路牌广告屏。 For the safety of pedestrians and vehicles, please make sure to turn off the road sign advertising screen while the vehicle is in motion.

2.3.19.下车门铃

2.3.19. Exit doorbell

车辆内扶手杆或轮椅区设置有乘客下车门铃按钮，用于提醒驾驶员有乘客下车。按下门铃按钮，下车门铃发出三声“叮咚”声，停车显示牌会显示“正在停车”字样。门铃按钮位置和数量视实车安装情况，门铃按钮分有线形式和无线形式。

The handrail or wheelchair area inside the vehicle is equipped with a passenger exit doorbell button to remind the driver that a passenger has disembarked. Press the doorbell button, and the doorbell will sound three "ding dong" sounds when getting off the car. The parking sign will display the words "Parking". The position and quantity of doorbell buttons depend on the installation situation of the actual vehicle. Doorbell buttons are divided into wired and wireless forms.



图 70 门铃按钮示意图



图 71 停车显示牌示意图

Figure 70 Schematic diagram of doorbell button Figure 71 Schematic diagram of parking display board

⚠注意
(1) 当门铃按钮按下时间小于 2 秒时，下车门铃有效； (2) 当按下时间大于 2 秒时，视为误操作； (3) 门铃起作用后，10 秒内再次按下时无效； (4) 门铃按钮按下时停车显示牌亮起，车门开启后熄灭； (5) 开门状态下，门铃按钮无效，门铃和停车显示牌（部分车型由此功能）不起作用； (1) When the doorbell button is pressed for less than 2 seconds, the exit doorbell is valid; (2) When pressed for more than 2 seconds, it is considered a misoperation; (3) After the doorbell is activated, it becomes invalid when pressed again within 10 seconds; (4) When the doorbell button is pressed, the parking display board lights up and goes out when the car door is opened; When the door is in the open state, the doorbell button is invalid, and the doorbell and parking display board (some models have this function) do not work;

2.3.20.翻转踏步



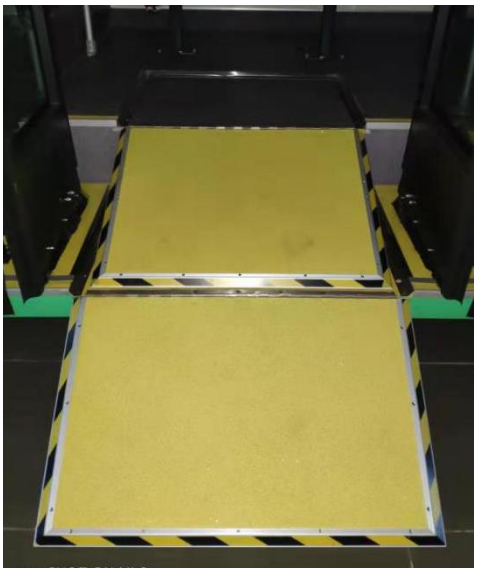

图 72 一级踏步车型用翻转踏步示意图　　图 73 二级踏步车型用翻转踏步示意图

Figure 72 Schematic diagram of flipping steps for first level stepping models Figure 73 Schematic diagram of flipping steps for second level stepping models

1. 一级踏步车型用翻转踏步

位于中门踏步区域内，由一组翻转踏步组成。

(1) 打开使用

在车辆完全停止，乘客门完全打开状态，位于平坦路面方可使用翻转踏步。拉住踏步区内翻转踏步的拉手向下翻开到地面上。

(2) 收回归位

使用结束后，拉住中门车厢内翻转踏步的拉手向上收回，确保翻转踏步完全归位。

2. 二级踏步车型用翻转踏步

位于中门区域，由两组翻转踏步组成，一组位于中门踏步区内，另一组位于中门车厢内。

(1) 打开使用

在车辆完全停止，乘客门完全打开状态，位于平坦路面方可使用翻转踏步。先拉住踏步区内翻转踏步的拉手向下翻开到地面上，再拉住中门车厢内翻转踏步的拉手向下翻开到踏步区内翻转踏步上，两组翻转踏步上下衔接好方可使用。

(2) 收回归位

使用结束后，先拉住中门车厢内翻转踏步的拉手向上收回，再拉住踏步区内翻转踏步的拉手向上收回，确保两组翻转踏步踏完全归位。

1. Flip step is used for first level stepping models

Located within the middle door step area, it consists of a set of flip steps.

(1) Open and use

The flip step can only be used when the vehicle is completely stopped, the passenger door is fully open, and the road surface is flat. Hold the handle of the flip step in the stepping area and flip it down to the ground.

(2) Return to its original position

After use, hold the handle of the flip step inside the middle door carriage and retract it upwards to ensure that the flip step is fully in place.

2. Flip steps are used for second level step models

Located in the middle door area, it consists of two sets of flip steps, one set located in the middle door step area and the other set located in the middle door carriage.

(1) Open and use

The flip step can only be used when the vehicle is completely stopped, the passenger door is fully open, and the road surface is flat. First, pull the handle of the flip step in the step area and flip it down to the ground. Then, pull the handle of the flip step in the middle door carriage and flip it down to the flip step in the step area. Only after the two sets of flip steps are connected up and down can they be used.

(2) Return to its original position

After use, first pull the handle of the flip step inside the middle door carriage to retract upwards, and then pull the handle of the flip step inside the step area to retract upwards, ensuring that both sets of flip steps are fully in place.

⚠注意
●必须在车辆完全停止，乘客门完全打开状态，位于平坦路面方可使用翻转踏步。 ●翻转踏步收回归位前，需确保上面不得有任何异物，以免收回归位时损坏翻转踏步。 ●翻转踏步出现异响、旷动时应及时检修，避免造成翻转踏步功能失效，甚至人员伤亡。 ●The flip step can only be used when the vehicle has come to a complete stop, the passenger door is fully open, and the road surface is flat. ●Before retracting the flip step back to its original position, it is necessary to ensure that there are no foreign objects on it to avoid damaging the flip step when retracting it back to its original position. ●When there is abnormal noise or looseness in the flipping step, it should be repaired in a timely manner to avoid the failure of the flipping step function and even personal injury.

2.3.21.ECAS(ELC)系统

2.3.21. ECAS (ELC) system

1. ECAS(ELC)系统操作

本内容适用于悬架为空气悬架且安装ECAS(ELC)系统的车辆。在仪表台上安装有两个开关控制车身的升高和降低，一个是带有（▲▼）标识的气囊升降开关，一个是带有（**RETURN**）标识的气囊复位开关（具体开关外形见实车）。

(1)车身升高：在车身处于正常高度情况下，车辆高度上升不大于70mm（特殊情况除外）。

(2)车身降低：在车身处于正常高度情况下，车辆降低的高度不大于70mm（特殊情况除外）。

(3)车身复位：在车身升高和车身降低情况下，按下自复位开关，车身高度恢复正常高度。

1. ECAS (ELC) system operation

This content is applicable to vehicles with air suspension and ECAS (ELC) system installed. There are two switches installed on the dashboard to control the raising and lowering of the vehicle body, one is the airbag lift switch with the () logo, and the other is the airbag reset switch with the (RETURN) logo (see actual vehicle for specific switch appearance).

(1) Vehicle height increase: When the vehicle is at normal height, the height increase of the vehicle should

not exceed 70mm (except in special circumstances).

(2) Vehicle lowering: When the vehicle is at normal height, the height of the vehicle lowering should not exceed 70mm (except in special circumstances).

(3) Vehicle body reset: When the vehicle body is raised or lowered, press the self reset switch to restore the normal height of the vehicle body.

⚠注意

以上操作必须在车辆静止状态、电源开关打开、储气筒的气压大于550kPa的情况下进行。

⚠警告

为保证安全，在车身升高或降低情况下，车辆的行驶车速不允许超过15km/h。

若行驶车速超过15km/h,车辆将自动恢复正常高度。

The above operations must be carried out when the vehicle is stationary, the power switch is turned on, and the air pressure in the reservoir is greater than 550kPa.

To ensure safety, the vehicle's speed is not allowed to exceed 15km/h when the body is raised or lowered.

If the driving speed exceeds 15km/h, the vehicle will automatically return to its normal height.

2. 倾斜Kneeling功能

当ECAS(ELC)系统选装倾斜Kneeling功能时，在仪表台上会有Kneeling图案的单档翘板开关（具体开关外形见实车），控制车身进行倾斜。

(1)车身倾斜：按下开关，车身开始向车门侧倾斜。

(2)车身复位:：按上开关，车身恢复正常位置。

2. Tilting Kneeling Function

When the ECAS (ELC) system is equipped with the tilt Kneeling function, there will be a single speed rocker switch with Kneeling pattern on the dashboard (the specific switch shape can be seen in the actual vehicle), which controls the body to tilt.

(1) Vehicle body tilting: Press the switch, and the vehicle body begins to tilt towards the side of the door.

Vehicle reset: Press the switch to restore the vehicle to its normal position.

⚠注意

以上操作必须在车辆静止状态、电源开关打开、储气筒的气压大于0.55Mpa的情况下进行。

The above operations must be carried out when the vehicle is stationary, the power switch is turned on, and the air pressure in the air storage cylinder is greater than 0.55Mpa.

警告

为保证安全，在车身倾斜状态下，车辆的行驶车速不允许超过5Km/h。

To ensure safety, the vehicle's speed is not allowed to exceed 5Km/h when the body is tilted.

2.3.22.主动安全系统（选装）

2.3.22. Active safety system (optional)

主动安全系统功能包含车道偏离预警（LDW）、前碰撞预警（FCW）、车距过近（HMW）、限速标志识别（SLI）、智能远光灯（IHC）等功能（相关功能可视客户需求配置增减）。

一、功能说明

1. **前向碰撞预警（FCW）**

实时监测车辆前方行驶环境，并在可能发生前向碰撞危险时发出警告信息。

(1) **示例一（仪表显示）**

当车辆与前方车辆满足预警条件，在可能发生碰撞的情况下，蜂鸣器发出声音并在仪表上显示以下标志图标。

The active safety system includes functions such as lane departure warning (LDW), front collision warning (FCW), close to vehicle (HMW), speed limit sign recognition (SLI), intelligent high beam (IHC), etc. (related functions can be adjusted according to customer needs).

1、 Function Description

Forward Collision Warning (FCW)

Real time monitoring of the driving environment ahead of the vehicle and issuing warning messages in case of potential forward collision hazards.

(1) Example 1 (Instrument Display)

When the vehicle meets the warning conditions with the vehicle ahead and there is a possibility of collision, the buzzer will sound and the following symbol icons will be displayed on the instrument panel.





车辆一级碰撞预警　　车辆二级碰撞预警

Vehicle Level 1 Collision Warning　　Vehicle Level 2 Collision Warning

当车辆与行人满足预警条件，在可能发生碰撞的情况下，蜂鸣器发出声音并在仪表上显示以下标志图标。

When the vehicle and pedestrian meet the warning conditions and there is a possibility of collision, the buzzer will sound and the following symbol icons will be displayed on the instrument panel.

　　

行人一级碰撞预警　　行人二级碰撞预警

Pedestrian Level 1 Collision Warning　　Pedestrian Level 2 Collision Warning

如出现以上情况，请立即采取补救措施。

当碰撞风险等级降低后，警告会自动取消（如您已减速或停驶，或前方障碍物已离开车辆所在的车道）。

If the above situation occurs, please take remedial measures immediately.

When the collision risk level decreases, the warning will be automatically cancelled (if you have slowed down or stopped, or if the obstacle ahead has left the lane where the vehicle is located).



前碰撞预警系统故障、不可用（（仪表显示）

FCW System Fault/Unavailable (Instrument Display)

驾驶员可通过仪表开关开启/关闭前碰撞预警功能。当仪表出现以下图标，则表示碰撞预警功能被关闭，旨在提醒驾驶员，当前系统被关闭，可以通过仪表台 FCW 开关，开启前碰撞预警功能。

The driver can enable or disable the FCW function via the instrument switch. If the following icon appears on the instrument panel, it indicates that the collision warning function has been turned off, reminding the driver that the system is currently disabled. The FCW function can be reactivated using the FCW switch on the dashboard.



前碰撞预警功能被关闭（仪表显示）

FCW Function Disabled (Instrument Display)

(2) 示例二（显示屏显示）：

(2) Example 2 (Display Screen):

当车辆与前方车辆满足预警条件，在可能发生碰撞的情况下，蜂鸣器发出声音并在显示屏上显示以下标志图标。

When the vehicle meets the warning criteria with a vehicle ahead and a collision may occur, the buzzer sounds, and the following icon is displayed on the screen.



车辆前碰撞预警

Vehicle Forward Collision Warning

当检测到车辆前方有行人，但无碰撞危险时，显示屏显示以下标志图标且蜂鸣器不发出声音

When a pedestrian is detected ahead of the vehicle but there is no collision risk, the following icon is displayed on the screen, and the buzzer does not sound.



车辆前方有行人，无碰撞危险

Pedestrian Detected Ahead, No Collision Risk

当与行人满足预警条件，在可能发生碰撞的情况下，蜂鸣器发出声音并在显示屏上显示以下标志图标。

When the warning criteria are met with a pedestrian and a collision may occur, the buzzer sounds, and the following icon is displayed on the screen.



行人前碰撞预警

Pedestrian Forward Collision Warning

如出现以上情况，请立即采取补救措施。

In any of these situations, take immediate corrective action.

当碰撞风险等级降低后，警告会自动取消（如您已减速或停驶，或前方障碍物已离开车辆所在的车道）。

The warning will automatically cancel when the collision risk level decreases (e.g., if you have slowed down or stopped, or if the obstacle has exited the vehicle's lane).

2. 车道偏离预警(LDW)

1. Lane Departure Warning (LDW)

实时监测车辆在本车道的行驶状态，并在出现或即将出现非驾驶意愿的车道偏离时发出警告信息。

The system continuously monitors the vehicle's position within its lane and issues a warning when an unintentional lane departure occurs or is about to occur.

(1) 示例一（仪表显示）：

(1) Example 1 (Instrument Display):

车道偏离预警(LDW)会帮助降低意外偏离车道的风险，当车有非自主性向旁边车道偏离的趋势，或即将越过车道线时，车道偏离预警可提供适当的视觉、听觉或两者组合方式的报警方式提醒驾驶员注意。

LDW helps reduce the risk of unintended lane departures. When the vehicle begins to drift toward an adjacent lane or is about to cross a lane marking unintentionally, LDW provides visual and/or auditory alerts to warn the driver.



左车道偏离预警

Left Lane Departure Warning



右车道偏离预警

Right Lane Departure Warning

当转向灯打开，车辆向相应一侧偏离时，车道偏离预警系统不会提醒。

When the turn signal is activated, the LDW system will not issue a warning if the vehicle drifts in the indicated direction.

当车道偏离预警功能因通讯中断等故障时，通过仪表显示当前系统出现故障，旨在提醒驾驶员当前系统故障、不可用，请及时联系售后维修车道偏离预警系统。

If the LDW function experiences a fault, such as a communication interruption, the instrument panel displays a fault notification, indicating that the system is currently unavailable. This serves to alert the driver of the system failure; please contact aftersales service to repair the LDW system.



车道偏离预警系统故障（仪表显示）

LDW System Fault (Instrument Display)

驾驶员可通过仪表开关车道偏离预警功能。当仪表出现以下图标，则表示车道偏离预警功能被关闭，旨在提醒驾驶员，当前系统被关闭，可以通过仪表台 FCW 开关，开启前碰撞预警功能。

The driver can enable or disable the LDW function via the instrument switch. If the following icon appears on the instrument panel, it indicates that the LDW function has been turned off, reminding the driver that the system is currently disabled. The function can be reactivated through the instrument panel switch.



车道偏离预警功能被关闭（仪表显示）

LDW Function Disabled (Instrument Display)

(2) 示例二（显示屏显示）：

(2) Example 2 (Display Screen):

车道偏离预警(LDW)会帮助降低意外偏离车道的风险，当车有非自主性向旁边车道偏离的趋势，或即将越过车道线时，车道偏离预警可提供适当的视觉、听觉或两者组合方式的报警方式提醒驾驶员注意。

LDW helps reduce the risk of unintended lane departures. When the vehicle begins to drift toward an adjacent lane or is about to cross a lane marking unintentionally, LDW provides visual and/or auditory alerts to warn the driver.



检测到车道线

Lane Marking Detected



左车道偏离预警

Left Lane Departure Warning



右车道偏离预警

Right Lane Departure Warning

当转向灯打开，车辆向相应一侧偏离时，车道偏离预警系统不会提醒。

When the turn signal is activated, the LDW system will not issue a warning if the vehicle drifts in the indicated direction.

2. 车距过近（HMW）

3. Headway Monitoring Warning (HMW)

(1) 示例一：

(1) Example 1:

当车辆与前方车辆距离小于报警距离时，车距过近预警将通过听觉方式提醒驾驶员注意。当预警风险等级降低后，预警会自动取消。

When the distance between the vehicle and the one ahead is less than the set warning distance, the headway monitoring warning will alert the driver audibly. The warning will automatically cancel when the risk level decreases.

(2) 示例二：

(2) Example 2:

当车头时距大于阈值，同时检测到车辆前方一定范围内有车辆，则显示绿色图标。若车头时距小于阈值，则显示红色的图标同时蜂鸣器工作，通过听觉与视觉的方式提醒驾驶员注意。当预警风险等级降低后，预警会自动取消。

When the headway distance exceeds the threshold and a vehicle is detected within a certain range ahead, a green icon will be displayed. If the headway distance is less than the threshold, a red icon will appear along with an audible alert to warn the driver. The warning will automatically cancel when the risk level decreases.



车头时距大于阈值

Headway Distance Greater Than Threshold



车头时距小于阈值

Headway Distance Less Than Threshold

4. 限速标志识别（SLI）

4. Speed Limit Indicator (SLI)

自动识别车辆行驶路段的限速标志，并通过显示屏显示如下

The system automatically detects the speed limit signs on the road and displays them on the screen as follows:



识别车辆行驶路段的限速标志

Detected Speed Limit Sign

当车速大于限速标志的车速，则显示速度标志闪烁，显示如下。旨在提醒驾驶员，当前已超速，请注意遵守交通规范。

When the vehicle speed exceeds the speed limit indicated by the sign, a flashing speed warning icon is displayed, alerting the driver that they are currently exceeding the speed limit.



车速大于限速标志

Vehicle Speed Greater Than Speed Limit Sign

5. 智能远光灯（IHC）

5.Intelligent High Beam Control (IHC)

帮助驾驶员控制车辆的远光灯。在黑暗的道路上且车辆附近没有车辆时，车速大于阈值，自动从近光灯切换到远光灯。

This feature helps the driver control the vehicle's high beams. On dark roads where there are no vehicles nearby and the vehicle speed exceeds a certain threshold, the system automatically switches from low beam to high beam.



智能远光灯功能启用

Intelligent High Beam Function Enabled



智能远光灯激活点亮

Intelligent High Beam Activated

智能远光灯激活点亮以后，均以驾驶员的意愿为优先，可以通过翘板开关关闭远光灯。

Once the intelligent high beams are activated, the driver's preferences take precedence, and the high beams can be turned off using the rocker switch.

⚠注意
仪表显示或显示屏显示仅作示意，并不能完全反映真实的交通情况，因此，请勿依赖于仪表或显示屏

⚠注意

的显示内容。同时具体预警方式视实车情况而定。

The instrument panel display or screen display is for illustrative purposes only and may not fully reflect real traffic conditions; therefore, do not rely solely on the information presented on the instrument panel or display screen. Additionally, the specific warning methods may vary depending on the actual vehicle configuration.

该功能为选装，是否配置此功能，具体详见车辆配置。

This feature is optional. For details on whether this function is equipped, please refer to the vehicle specifications.

2、注意事项及限制

2. Precautions and Limitations

主动安全系统并非总能检测到各种物体、车辆以及行人，多种原因都可能会导致发生不必要、不准确或无效的警告或遗漏警告，包括但不限于以下情况：

The active safety system does not always detect various objects, vehicles, and pedestrians. Multiple factors may cause unnecessary, inaccurate, or ineffective warnings, or even missed warnings, including but not limited to the following situations:

(1)摄像头被遮挡、脏污或故障；

(1) The camera is obstructed, dirty, or malfunctioning;

(2)夜晚识别能力降低；

(2) Reduced recognition capability at night;

(3)周围环境昏暗，如黎明、黄昏、夜间、隧道中；

(3) Poor visibility due to dim surroundings, such as dawn, dusk, nighttime, or inside tunnels;

(4)周围环境亮度突变，如隧道入口或出口；

(4) Sudden changes in ambient light, such as entering or exiting a tunnel;

(5)建筑物、风景或者大型车辆投下的大片阴影；

(5) Large shadows cast by buildings, scenery, or large vehicles;

(6)摄像头被太阳斜射、被光直射时；

(6) The camera is illuminated by direct sunlight or glare;

(7)雨、雪、雾、霾等恶劣天气；

(7) Severe weather conditions, such as rain, snow, fog, or haze;

(8)前方车辆扬起的尾气、水花、雪花或尘土等落到车辆上；

(8) Exhaust, water splashes, snowflakes, or dust kicked up by the vehicle in front landing on your vehicle;

(9)摄像头前的挡风玻璃上有水、灰尘、微划痕、油腻、脏污、雨刮器、冻结、降雪等；

(9) Water, dust, minor scratches, grease, dirt, wipers, frost, or snow on the windshield in front of the camera;

(10)潮湿路面；

(10) Wet road surfaces;

(11)道路有急转弯；

(11) Sharp turns in the road;

(12)接近或者通过道路转弯时可能会误选或者漏选目标；

(12) Approaching or navigating a turn may lead to misidentifying or missing targets;

(13)处于坡上可能会丢失目标或者误判与目标之间的距离；

(13) On a slope, targets may be lost, or distances to targets may be misjudged;

(14)当相邻车道车辆仅有部分车身切入到自车前方（尤其是大巴、货车等大车切入），可能无法及时识别；

(14) When vehicles in adjacent lanes partially enter your vehicle's front (especially large vehicles like buses or trucks), they may not be recognized in time;

(15)本车突然切入到前方车辆后方，或者其他车辆突然切入或切出本车前方时，可能无法及时识别；

(15) If your vehicle suddenly cuts in behind another vehicle or if other vehicles suddenly cut in or out in front of you, they may not be recognized in time;

(16)通过曲率过大的弯道，如高速匝道等；

(16) Navigating through excessively curved roads, such as highway ramps;

(17)车道线不清晰、磨损、缺失、交叉、受到其他车辆或建筑物或风景投下的阴影遮挡等；

(17) Unclear, worn, or missing lane markings, or lane markings obscured by shadows from other vehicles, buildings, or scenery;

(18)通过无车道线的路段，譬如非标准化道路、十字路口、施工区域等；

(18) Passing through areas without lane markings, such as non-standard roads, intersections, or construction zones;

(19)通过特殊车道线的路段，譬如减速提示线，导流线等；

(19) Passing through areas with special lane markings, such as deceleration warning lines or guiding lines;

(20)通过车道划分不清晰区域，譬如车道线汇合或分离区域，高速匝道口，城市路口区域，左转待

行区域等。

(20) Navigating through unclear lane division areas, such as where lane markings converge or diverge, highway ramp entrances, urban intersection areas, or left-turn waiting areas.

3、声明

3. Disclaimer

（1）主动安全系统仅提供图像、声音或者声音和图像组合的方式进行预警，系统并不会尝试实施制动力或进行减速，当看到和/或听到警告时，驾驶员有责任立即采取纠正措施。如发现危险，切勿等待主动安全系统预警触发后再采取行动。您始终承担着安全驾驶的最终责任，且需遵守现行交通法律法规。

(1) The active safety system provides warnings solely in the form of images, sounds, or a combination of both. The system does not attempt to apply braking force or deceleration. Upon seeing and/or hearing a warning, the driver is responsible for immediately taking corrective action. If a hazard is detected, do not wait for the active safety system's warning before acting. You bear the ultimate responsibility for safe driving and must adhere to current traffic laws and regulations.

（2）主动安全系统仅供参考，无法替代您的注意力与判断。路况和天气情况均可能对主动安全系统能够监控的区域造成不利的影响，请务必谨慎驾驶。

(2) The active safety system is for reference only and cannot replace your attention and judgment. Road and weather conditions may negatively impact the system's monitored areas; please drive cautiously at all times.

（3）主动安全系统可能会在不存在碰撞/偏离车道风险的情况下发出警报。请保持警觉，并时刻关注车辆前方的区域，以便预测是否需要采取任何措施。

(3) The active safety system may issue alerts even when there is no risk of collision or lane departure. Stay alert and continuously monitor the area in front of the vehicle to anticipate whether any action is needed.

2.3.23.驾驶行为监测系统（选装）

2.3.23. Driver Behavior Monitoring System (Optional)

1、功能说明

1. Function Description

驾驶员行为监测系统会在行驶过程中，通过智能视觉系统，感知驾驶员的注意力状态，及时提醒告知驾驶员。当系统满足功能激活条件（激活条件可在系统标定的时候设置），驾驶员一旦分神、疲劳或者其他不良驾驶行为，通过语音播报或者声音提醒的方式提示，提醒专注驾驶，守护驾驶员的行车安全。

驾驶员行为监测系统 DMS 具备驾驶员行为监测功能，一般包含疲劳驾驶报警、长时间不目视前方报警、抽烟报警、未检测到驾驶员等报警情况。

The Driver Behavior Monitoring System continuously monitors the driver's attention during operation using an intelligent vision system, alerting the driver when necessary. Once the system meets activation criteria (set during system calibration), it provides voice or sound alerts whenever the driver becomes distracted, fatigued, or exhibits other improper driving behaviors, thereby promoting driving focus and ensuring driver safety. The Driver Monitoring System (DMS) includes driver behavior detection features, generally encompassing alarms for fatigue driving, prolonged lack of forward gaze, smoking, and absence of driver detection.

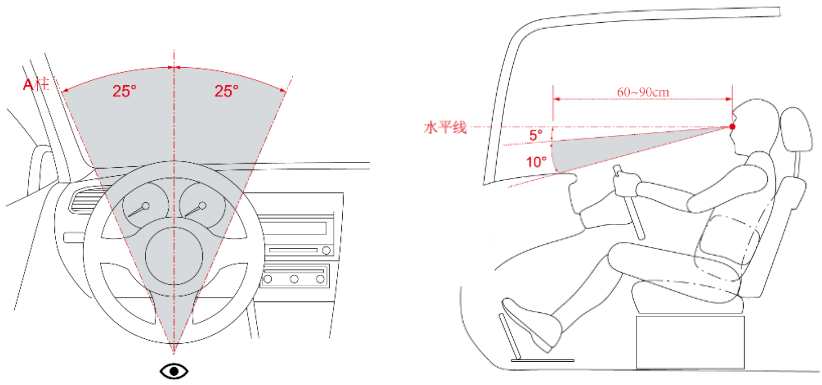

图 74 驾驶行为监测系统安装位置示意图（视实际情况来定）

Figure 74: Installation Location of Driver Behavior Monitoring System (Determined by Actual Vehicle Configuration)

2、注意事项及限制

2. Precautions and Limitations

在某些情况下，可能影响或无法监测到不良的驾驶行为，多种原因都可能会导致发生不必要、不准确或无效的警告或遗漏警告，包括但不限于以下情况：

In certain situations, the system may be unable to detect or accurately monitor improper driving behaviors. Various factors may lead to unnecessary, inaccurate, invalid, or missed warnings, including but not limited to the following conditions:

(1)摄像头被遮挡、脏污或故障

(1) Camera blockage, dirt, or malfunction

(2)夜晚及光线较暗的情况下

(2) Nighttime or low-light conditions

(3)阳光、对面车灯等直射光线干扰情况下

(3) Direct light interference, such as sunlight or oncoming headlights

(4)眼睛有遮挡的情况下，包括但不限于透光率较低的各类墨镜、偏光镜、太阳镜，以及眼镜边框遮挡等

(4) Eyes partially obscured by low-transparency sunglasses, polarized glasses, or frames that block the camera's view

(5)戴帽子、围巾、头巾等可能会改变头部形状的配饰

(5) Head accessories altering head shape, including hats, scarves, and headwraps

(6)戴口罩

(6) Wearing a face mask

3、声明

3. Disclaimer

驾驶员疲劳监测系统无法在所有条件下工作，仅用作辅助设备。驾驶员应始终对确保车辆安全驾驶承担最终责任，专注驾驶以及适时停车休息非常重要。在出现不良驾驶行为迹象时，驾驶员需要及时调整驾驶行为确保驾驶出行安全。

The Driver Fatigue Monitoring System cannot function under all conditions and serves as an auxiliary device only. The driver bears ultimate responsibility for safe vehicle operation, maintaining focus, and taking breaks when necessary. If signs of improper driving behavior appear, the driver should promptly adjust their driving habits to ensure a safe journey.

⚠注意
该功能为选装，是否配置此功能，具体详见车辆配置。 This feature is optional. Please refer to the vehicle's configuration details to determine if this function is included.

2.3.24.360 环视（选装）

2.3.24. 360° Surround View (Optional)

1. 功能说明

1. Function Description

360 环视系统基于车身周边摄像头，对同一时刻采集车身周围的 360 度俯视图，并在仪表台的屏幕上显示，可在设备标定时，设置屏幕画面分屏需求格式，让驾驶员清楚的了解车辆周边的情况，可减少盲区，降低碰撞、剐蹭等事故的发生。

The 360° surround view system uses cameras mounted around the vehicle to capture a 360-degree bird's-eye view of the vehicle's surroundings in real time. This view is displayed on the dashboard screen, allowing for a split-screen display format, which can be configured during system calibration. This feature provides the driver with a clear view of the vehicle's surroundings, helping to minimize blind spots and reduce the likelihood of collisions and scrapes.

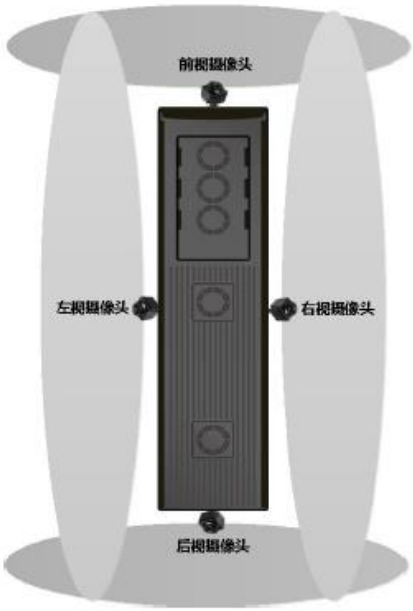

图 75 360 环视示意图

Figure 75: 360° Surround View Diagram

当开启左转向灯时，中控台屏幕显示左后方的图像；当开启右转向灯时，中控台屏幕显示右后方的图像；当挂倒挡的时候，中控台屏幕显示车后图像。

When the left turn signal is activated, the center console screen displays the rear-left view. When the right turn signal is activated, the screen displays the rear-right view. When reversing, the screen shows the rear view.

当系统故障时，无法显示中控台屏幕图像，请及时联系售后服务人员进行排查检修。

If the system malfunctions and images cannot be displayed on the center console screen, please promptly contact after-sales service for inspection and repair.

2. 注意事项及限制

2. Precautions and Limitations

360 环视并非总能检测到各种物体、车辆以及行人，多种原因都可能会导致发生漏检/误检，包括但不限于以下情况：

The 360° surround view system may not always detect all objects, vehicles, or pedestrians. Multiple factors

may lead to missed or false detections, including but not limited to the following situations:

（1）一个或多个摄像头被遮挡、脏污或故障；

(1) One or more cameras are obstructed, dirty, or malfunctioning.

（2）夜晚识别能力降低；

(2) Reduced detection capabilities at night.

（3）周围环境昏暗，如黎明、黄昏、夜间、隧道中；

(3) Dim lighting environments, such as dawn, dusk, nighttime, or inside tunnels.

（4）周围环境亮度突变，如隧道入口或出口；

(4) Sudden changes in surrounding brightness, such as tunnel entrances or exits.

（5）建筑物、风景或者大型车辆投下的大片阴影；

(5) Large shadows cast by buildings, scenery, or large vehicles.

（6）摄像头被太阳斜射、被光直射时；

(6) Cameras exposed to slanting sunlight or direct bright light.

（7）雨、雪、雾、霾等恶劣天气；

(7) Adverse weather conditions like rain, snow, fog, or smog.

（8）前方车辆扬起的尾气、水花、雪花或尘土等落到车辆上；

(8) Splashing from exhaust fumes, water, snow, or dust kicked up by vehicles ahead.

（9）摄像头前的挡风玻璃上有水、灰尘、微划痕、油腻、脏污、雨刮器、冻结、降雪等。

(9) Windshield areas in front of the cameras are affected by water, dust, fine scratches, grease, dirt, wiper marks, frost, or snowfall.

3. 声明

3. Disclaimer

360 环视系统无法在所有条件下工作，不提供预警提示，仅用作辅助设备，用于车身周围盲区监测显示。路况和天气等情况均可能对 360 环视系统造成不利的影响，请务必谨慎驾驶。驾驶员应始终对确保车辆安全驾驶承担最终责任，请保持警觉，并时刻关注车辆所处路况，以便预测是否需要采取任何措施。

The 360° surround view system cannot function under all conditions and does not provide alert warnings. It is intended as an auxiliary device for monitoring blind spots around the vehicle. Road and weather conditions may adversely affect the 360° surround view system; please drive cautiously. The driver is ultimately responsible for ensuring safe vehicle operation. Stay alert and remain attentive to the surrounding road conditions to anticipate any necessary actions.

⚠注意

该功能为选装，是否配置此功能，具体详见车辆配置。

This function is optional. Please refer to the vehicle configuration to confirm whether this feature is included.

2.3.25.电子后视镜

2.3.25. Electronic Rearview Mirror

1. 功能说明

1. Function Description

电子后视镜系统基于车身侧边长短距摄像头，使得车辆侧边的图像都在车内后视镜中显示，减少视野盲区，提升驾驶员视野范围，减少因盲区而引发的事故。可选配存储卡，存储车辆当前侧边的路况，用于产生侧面碰撞时，纠纷责任的认定。

The electronic rearview mirror system utilizes short and long-range cameras mounted on the sides of the vehicle to display images of the vehicle's side areas within the interior rearview mirror. This reduces blind spots and enhances the driver's field of view, thereby minimizing accidents caused by such blind spots. An optional storage card can be included to record current road conditions alongside the vehicle, which can be used to establish liability in the event of a side collision.



图 76 电子后视镜示意图

Figure 76: Electronic Rearview Mirror Schematic

当系统故障时，车内后视镜无法车侧图像，请及时联系售后服务人员进行排查检修。

In the event of a system failure, the interior rearview mirror will not display side images of the vehicle. Please contact after-sales service personnel promptly for inspection and repair.

2. 注意事项及限制

2.Notes and Limitations

电子后视镜并非总能检测到各种物体、车辆以及行人，多种原因都可能会导致发生漏检/误检，包括但不限于以下情况：

The electronic rearview mirror may not always detect all objects, vehicles, and pedestrians. Various factors may lead to false negatives or false positives, including but not limited to the following situations:

(1)一个或多个摄像头被遮挡、脏污或故障。

(1) One or more cameras are obstructed, dirty, or malfunctioning.

(2)夜晚识别能力降低。

(2) Reduced recognition capability at night.

(3)周围环境昏暗，如黎明、黄昏、夜间、隧道中。

(3) Low visibility conditions, such as dawn, dusk, nighttime, or inside tunnels.

(4)周围环境亮度突变，如隧道入口或出口。

(4) Sudden changes in ambient light, such as entering or exiting a tunnel.

(5)建筑物、风景或者大型车辆投下的大片阴影。

(5) Large shadows cast by buildings, scenery, or large vehicles.

(6)摄像头被太阳斜射、被光直射时。

(6) Cameras affected by glare or direct sunlight.

(7)雨、雪、雾、霾等恶劣天气。

(7) Adverse weather conditions such as rain, snow, fog, or smog.

(8)摄像头前的挡风玻璃上有水、灰尘、微划痕、油腻、脏污、雨刮器、冻结、降雪等。

(8) Water, dust, minor scratches, oil, dirt, or obstructions like windshield wipers or ice/snow on the windshield in front of the cameras.

3. 系统概述

3. System Overview

(1)12.3 英寸监视器后方有一个红色 LED 状态示灯，该 LED 将在以下情况下生效：

(1) A red LED status indicator is located behind the 12.3-inch monitor. This LED will activate in the following situations:

- 后视镜系统复位。
- Rearview mirror system reset.
- 后视镜视频流故障。
- Failure of the rearview mirror video stream.

- 后视镜主机屏 ECU 模块故障。
- Fault in the rearview mirror main ECU module.
- 后视镜系统启动故障。
- Failure during rearview mirror system startup.

(2) 启动开关

(2) Start Switch

启动开关用于打开和关闭电子后视镜系统。当前门关闭和电源翘板开关关闭时，系统将进行受控关机。启动开关关闭后，系统将保持开机 2 分钟。在这 2 分钟之后，系统将再待机 5 分钟，并可以重新激活，以便在 1 秒内再次获得所需的视野。 在 7 分钟之内没有做激活操作（启动车辆、开前门等），5 分钟后系统关机。

The start switch is used to turn the electronic rearview mirror system on and off. When the current door is closed and the power toggle switch is off, the system will perform a controlled shutdown. After the start switch is turned off, the system will remain on for 2 minutes. After these 2 minutes, the system will go into standby mode for 5 minutes and can be reactivated to regain the required visibility within 1 second. If no activation occurs within 7 minutes (such as starting the vehicle or opening the front door), the system will shut down after 5 minutes.

(3) 显示器亮度和对比度调节

(3) Display Brightness and Contrast Adjustment

自动亮度调节：根据周围光线条件，使用光传感器自动调整显示器亮度，来应对不同行驶环境。

Automatic Brightness Adjustment: The brightness of the display is automatically adjusted using a light sensor based on surrounding light conditions to accommodate different driving environments.

手动亮度调节：通过显示屏背后的按键来调节显示亮度。

Manual Brightness Adjustment: Brightness can be adjusted using buttons located behind the display.

手动对比度调节：通过显示屏背后的按键来调节对比度。

Manual Contrast Adjustment: Contrast can be adjusted using buttons located behind the display.

(4) 系统信息存储

(4) System Information Storage

为满足产品对更高可靠性和降低失效可能性的需求，系统需设置了一定的冗余。可 以实现系统各部件、各模块的故障自检。 同时，电子后视镜在运行过程中产的图像也可 以录制下来，（选择性配置固态硬盘），以上信息，如：括视频数据、故障信息等。均支持通过外置存储设备进行本地存储。

To meet the product's requirements for higher reliability and reduced likelihood of failure, the system is designed with certain redundancies. Self-diagnostic tests for the faults of each component and module can be performed. Additionally, images generated during the operation of the electronic rearview mirror can also be recorded (optional solid-state drive). The information, such as video data and fault information, supports local storage via external storage devices.

(5) 按钮使用

(5) Button Usage

系统菜单分为两级，主菜单和隐藏菜单。

The system menu is divided into two levels: the main menu and the hidden menu.

一级菜单------隐藏菜单

Level 1 Menu — Hidden Menu

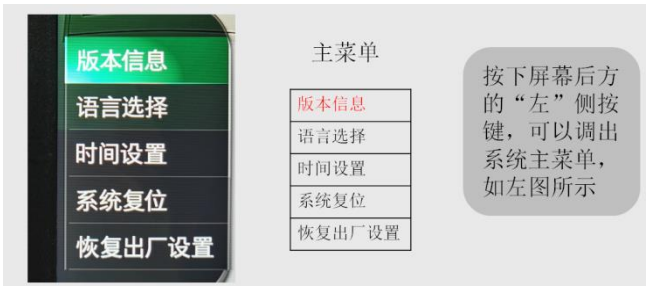

图 77 主菜单（一级菜单）示意图

Figure 77: Main Menu (Level 1 Menu) Schematic



图 78 隐藏菜单示意图

Figure 78: Hidden Menu Schematic

注：由于按键在显示屏后方，所以当显示器安装好后，按键的左右是会对调，故在此提醒按键的位置关系。

Note: Since the buttons are located behind the display, the left and right positions of the buttons will be reversed after the monitor is installed. This is a reminder regarding the positional relationship of the buttons.

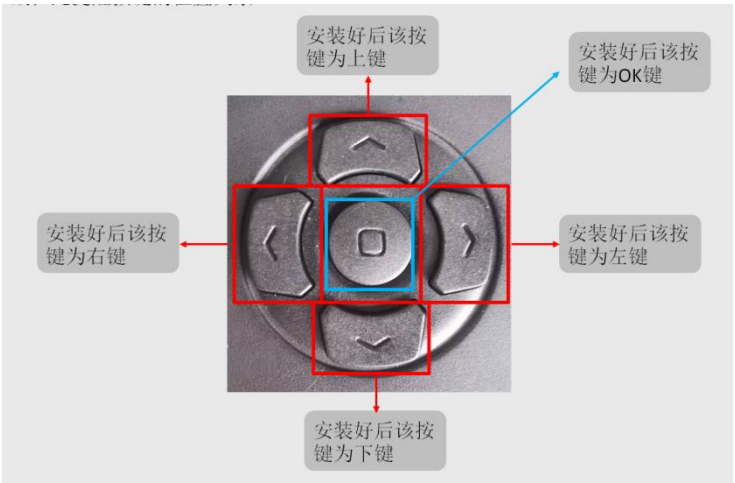

图 79 按键功能示意图

Figure 79: Button Function Schematic

4. 主菜单介绍

4. Main Menu Introduction

（1）版本信息

(1) **Version Information**



图 80 版本信息示意图

Figure 80: Version Information Schematic

（2）语言选择

(2) **Language Selection**



图 81 语言选择选项示意图

Figure 81: Language Selection Options Schematic

（3）时间设定

(3) Time Settings

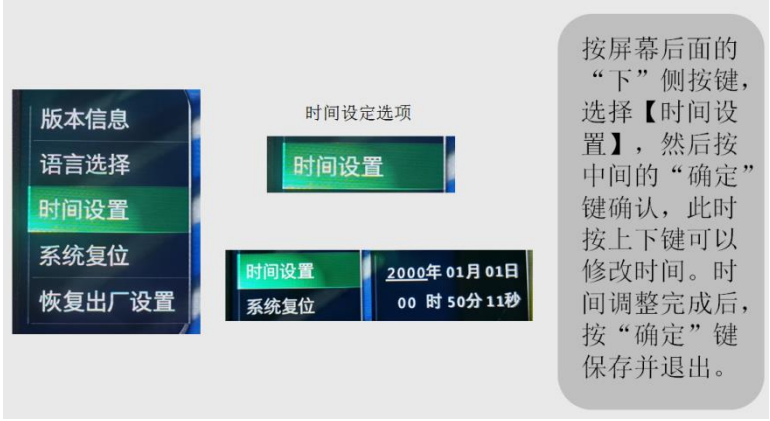

图 82 时间设定选项示意图

Figure 82: Time Settings Options Schematic

(4) 系统复位

(4) **System Reset**

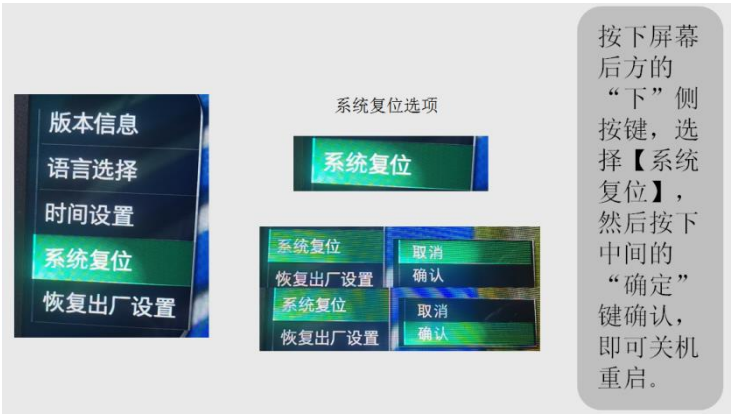

图 83 系统复位选项示意图

Figure 83: System Reset Options Schematic

(5) 恢复出厂设置

(5) **Restore Factory Settings**



图 84 恢复出厂设置示意图

Figure 84: Restore Factory Settings Schematic

5. 隐藏菜单

5. Hidden Menu

(1)开始标定&安装高度&车身长度

(1) Start Calibration & Installation Height & Vehicle Length

这些功能暂时没有开放

These functions are currently not available.

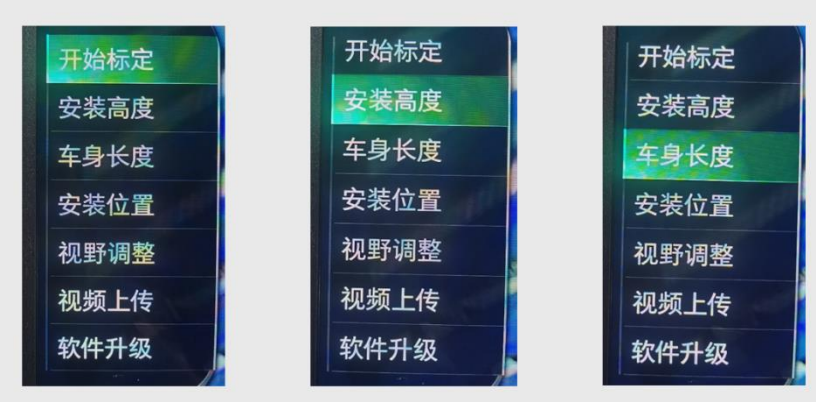

图 85 开始标定&安装高度&车身长度示意图（暂未开放）

Figure 85: Start Calibration & Installation Height & Vehicle Length Schematic (Not Available)

(2)安装位置

(2) Installation Position

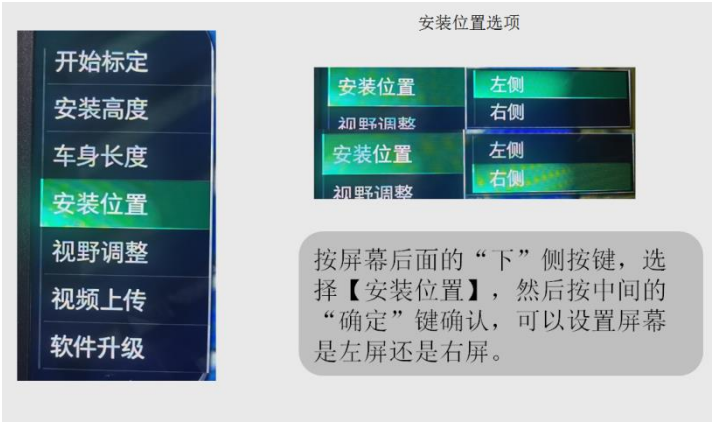

图 86 安装位置选项示意图

Figure 86: Installation Position Options Schematic

(3)视野调节功能

(3) Field of View Adjustment Function

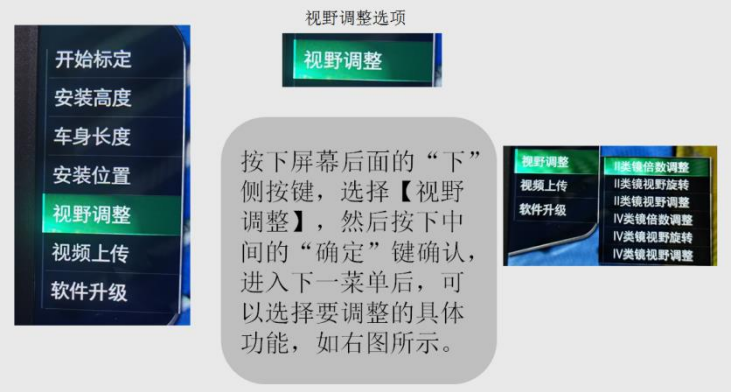

图 87 视野调整选项示意图

Figure 87: Field of View Adjustment Options Schematic

视野倍数调整、视野旋转和视野调整功能

Field of view magnification adjustment, rotation, and adjustment functions.

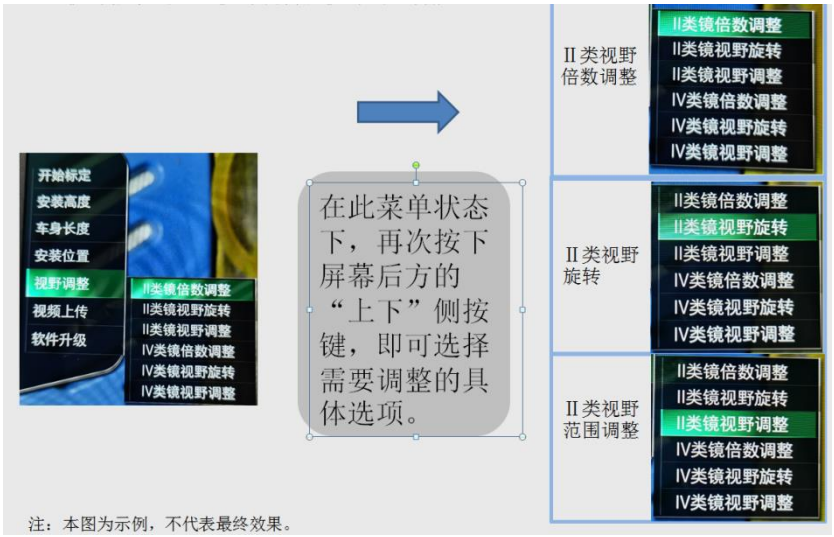

图 88 视野倍数调整、视野旋转和视野调整功能示意图

Figure 88: Field of View Magnification Adjustment, Rotation, and Adjustment Functions Schematic

a. II类视野放大倍数调整:

a. Type II Field of View Magnification Adjustment:



图 89 Ⅱ类视野放大倍数调整示意图

Figure 89: Type II Field of View Magnification Adjustment Schematic

b. Ⅱ类视野倍数调整效果如下：

b. Type II Field of View Magnification Adjustment Effect:

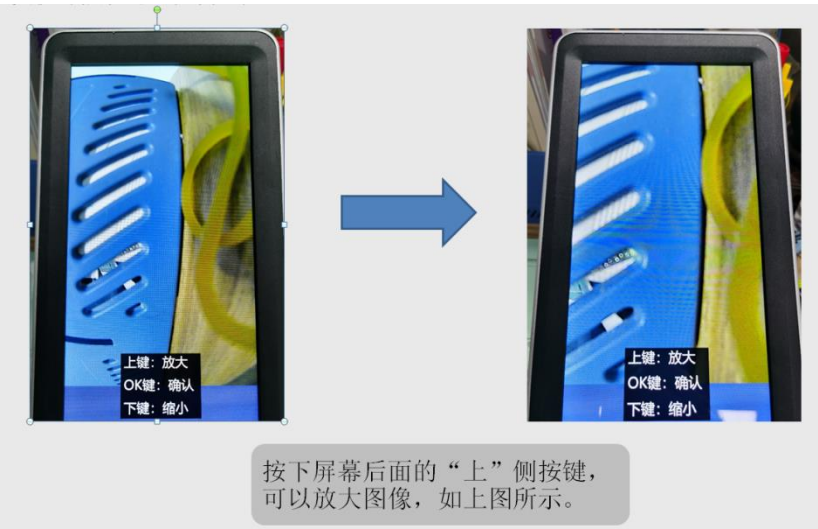

图 90 Ⅱ类视野倍数调整效果示意图

Figure 90: Type II Field of View Magnification Adjustment Effect Schematic

c. Ⅳ类视野旋转功能：

c. Type IV Field of View Rotation Function:

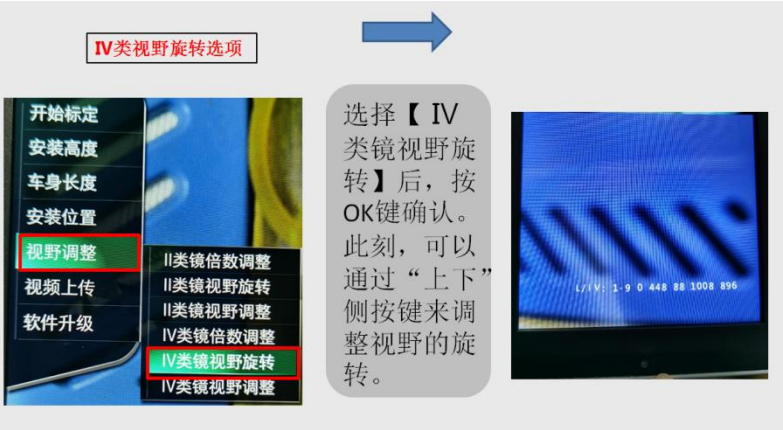

图 91 Ⅳ类视野旋转功能示意图

Figure 91: Type IV Field of View Rotation Function Schematic

d. Ⅳ类视野范围调整功能：

d. Type IV Field of View Range Adjustment Function:

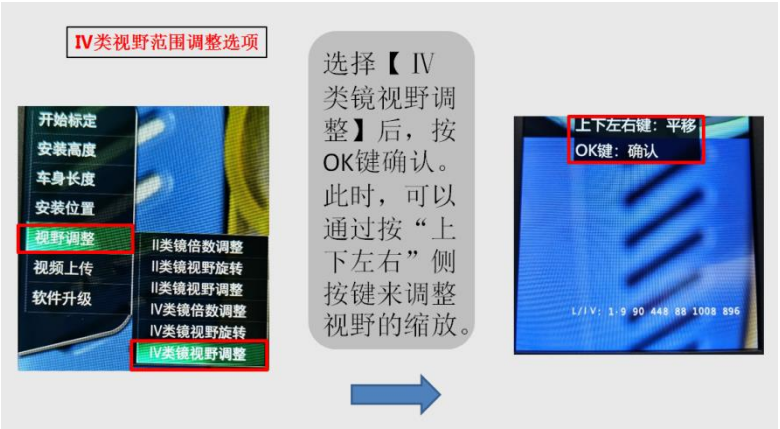

图 92 Ⅳ类视野范围调整功能示意图

Figure 92: Type IV Field of View Range Adjustment Function Schematic

(4) 视频上传

(4) Video Upload

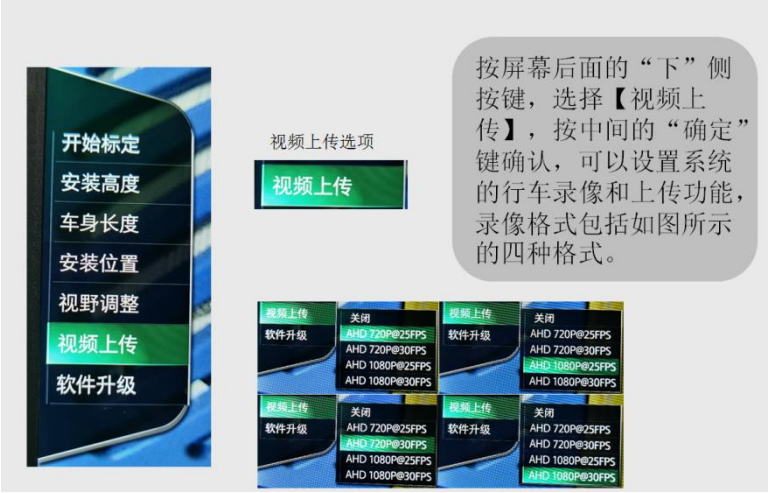

图 93 视频上传示意图

Figure 93: Video Upload Schematic

(5) 软件升级

(5) Software Upgrade



图 94 软件升级示意图

Figure 94: Software Upgrade Schematic

6. 手动调整屏幕亮度

6. Manual Screen Brightness Adjustment



图 95 手动调整屏幕亮度示意图

Figure 95: Manual Screen Brightness Adjustment Schematic

7. 声明

7. Statement

电子后视镜系统并不能完全取代传统电子后视镜，无法在所有条件下工作。电子后视镜系统不提供预警提示，仅用作辅助设备，用于车身侧边盲区监测显示。路况和天气等情况均可能对电子后视镜系统造成不利的影响，请务必谨慎驾驶。驾驶员应始终对确保车辆安全驾驶承担最终责任，请保持警觉，并时刻关注车辆所处路况，以便预测是否需要采取任何措施。

The electronic rearview mirror system cannot completely replace traditional electronic rearview mirrors and does not function in all conditions. The electronic rearview mirror system does not provide warning alerts and is intended solely as an auxiliary device for monitoring blind spots alongside the vehicle. Road conditions and weather may adversely affect the performance of the electronic rearview mirror system, so please drive cautiously. The driver always bears the ultimate responsibility for ensuring safe vehicle operation, and should remain vigilant and continuously monitor the road conditions to determine if any actions are necessary.

⚠注意
该功能为选装，是否配置此功能，具体详见车辆配置。 This feature is optional; for details on whether this feature is configured, please refer to the vehicle configuration.

2.3.26.行驶区域信息提示系统（MOIS）

2.3.26. Driving Area Information Prompt System (MOIS)

1. 功能说明

1. Function Description

行驶区域信息提示系统，基于车辆前向顶部摄像头，感知车辆前部行人和骑车人的信息。当监测到车辆前方存在行人或骑车人，车速在 0-10km/h 范围内，通过小显示屏的信息信号或报警信号提示驾驶员注意行车安全。

The Driving Area Information Prompt System (MOIS) utilizes the vehicle's forward top camera to detect information about pedestrians and cyclists in front of the vehicle. When a pedestrian or cyclist is detected in front of the vehicle, and the speed is within the range of 0-10 km/h, the system will prompt the driver to pay attention to driving safety through information signals or alarm signals displayed on a small screen.

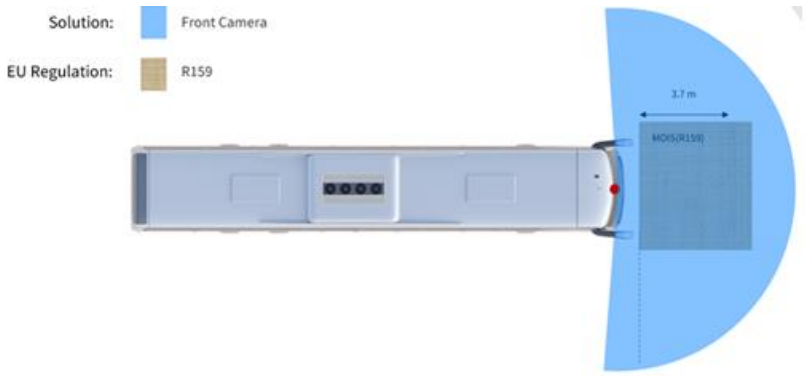

图 96 行驶区域信息提示系统示意图

Figure 97: Driving Area Information Prompt System Schematic

车辆上电后，行驶区域信息提示系统（MOIS）功能会自检，仪表会出现 MOIS 故障灯，常亮 3-5s 后，若系统无故障，则 MOIS 故障灯熄灭。若系统存在故障，MOIS 故障灯常亮，车辆重新启动后，该故障仍然存在。

After the vehicle is powered on, the MOIS system performs a self-check. The instrument panel will display the MOIS fault light, which will remain on for 3-5 seconds. If the system is functioning properly, the MOIS fault light will turn off. If a fault is detected, the MOIS fault light will stay illuminated, and the fault will persist after the vehicle is restarted.



图 97 MOIS 故障灯示意图

Figure 98: MOIS Fault Light Schematic

驾驶员可以通过长按 2S 驾驶座左侧的 MOIS 开关，手动停用报警提示声音，此时仪表 MOIS 故障图标连续闪烁一段时间后，故障图标将熄灭。停用报警提示声音后，驾驶员可以使用相同的方法（长按 2S 驾驶座左侧的 MOIS 开关）重新开启报警提示声音。车辆重新启动后，报警提示声音将默认为启用状态。

The driver can manually disable the alarm sound by long-pressing the MOIS switch on the left side of the driver's seat for 2 seconds. The instrument panel will then show the MOIS fault icon flashing for a period before it turns off. After disabling the alarm sound, the driver can re-enable it using the same method. Upon restarting the vehicle, the alarm sound will be set to enabled by default.

当前方一定的监测范围内检测到车辆前方有行人或骑行人时，将触发黄色 MOIS 信息信号。当车速在 1-10km/h 之间时且行人或骑行人进入警告信号触发区时，黄色信息信号将升级为红色报警信号，会伴随 MOIS 报警信号图标闪烁和蜂鸣声。

When a pedestrian or cyclist is detected within a certain monitoring range in front of the vehicle, a yellow MOIS information signal will be triggered. If the speed is between 1-10 km/h and the pedestrian or cyclist enters the warning signal trigger zone, the yellow information signal will upgrade to a red alarm signal, accompanied by a flashing MOIS alarm icon and a beeping sound.

MOIS 信息信号

MOIS Information Signal



MOIS 报警信号

MOIS Alarm Signal

2. 注意事项及限制

2. Precautions and Limitations

行驶区域信息提示系统并非总能检测到车辆前方行人及骑行人，多种原因都可能会导致发生不必要、不准确或无效的警告或遗漏警告，包括但不限于以下情况：

The Driving Area Information Prompt System may not always detect pedestrians and cyclists in front of the vehicle. Various factors may lead to unnecessary, inaccurate, or ineffective warnings, or result in missed warnings, including but not limited to the following situations:

(1) 摄像头被遮挡、脏污或故障；

(1) One or more cameras are blocked, dirty, or malfunctioning;

(2) 夜晚识别能力降低；

(2) Reduced recognition ability at night;

(3) 周围环境昏暗，如黎明、黄昏、夜间、隧道中；

(3) Surrounding environment is dim, such as at dawn, dusk, night, or in a tunnel;

(4) 周围环境亮度突变，如隧道入口或出口；

(4) Sudden changes in surrounding brightness, such as at the entrance or exit of a tunnel;

(5) 建筑物、风景或者大型车辆投下的大片阴影；

(5) Large shadows cast by buildings, landscapes, or large vehicles;

(6) 摄像头被太阳斜射、被光直射时；

(6) Camera is struck by oblique sunlight or direct light;

(7) 雨、雪、雾、霾等恶劣天气；

(7) Adverse weather conditions such as rain, snow, fog, or haze;

(8) 前方车辆扬起的尾气、水花、雪花或尘土等落到车辆上；

(8) Exhaust, water spray, snowflakes, or dust kicked up by vehicles in front landing on the vehicle;

(9) 摄像头前的挡风玻璃上有水、灰尘、微划痕、油腻、脏污、雨刮器、冻结、降雪等；

(9) Water, dust, fine scratches, grease, dirt, wipers, freezing, or snow on the windshield in front of the camera;

(10) 道路有急转弯；

(10) Sudden turns in the road;

(11) 接近或者通过道路转弯时可能会误选或者漏选目标；

(11) Approaching or turning on the road may cause misclassification or missed targets;

(12) 处于坡上可能会丢失目标或者误判与目标之间的距离；

(12) Being on an incline may cause loss of targets or misjudgment of the distance to targets;

(13)行人或自行车骑行人突然出现，可能无法及时识别；

(13) Sudden appearance of pedestrians or cyclists may not be recognized in time;

3. 声明

3. Disclaimer

行驶区域信息提示系统仅在车速为 0～10km/h 的状态下工作，当车速超过此范围、驾驶员挂倒挡、系统故障等状态下，系统不工作。路况和天气等情况均可能对行驶区域信息提示系统造成不利的影响，请务必谨慎驾驶。行驶区域信息提示系统并不能完全准确识别前方行人及自行车骑行人，驾驶员应始终对确保车辆安全驾驶承担最终责任，请保持警觉，并时刻关注车辆所处路况，以便预测是否需要采取任何措施。

The Driving Area Information Prompt System only operates when the speed is between 0-10 km/h. The system will not function when the speed exceeds this range, the driver shifts into reverse, or in case of system faults. Road conditions and weather may adversely affect the Driving Area Information Prompt System, so please drive with caution. The Driving Area Information Prompt System cannot completely and accurately identify pedestrians and cyclists in front of the vehicle. The driver is always responsible for ensuring the safe operation of the vehicle. Please remain vigilant and constantly monitor the road conditions to anticipate any necessary actions.

⚠注意

该功能为欧盟地区必装功能。
This function is a mandatory feature in the EU region.
仪表显示或显示屏显示仅作示意，并不能完全反映真实的交通情况，因此，请勿依赖于仪表或显示屏的显示内容。
Instrument displays or screen displays are for illustrative purposes only and do not fully reflect real traffic conditions; therefore, do not rely solely on the information displayed on the instrument or screen.

2.3.27.盲点信息提示系统（BSIS）

2.3.27. Blind Spot Information Prompt System (BSIS)

1. 功能说明

1. Function Description

盲点信息提示系统（BSIS），基于车辆前向顶部鱼眼摄像头、车辆右侧右平视及右鱼眼摄像头，感知车辆右侧指定范围内的自行车骑车人的信息。当监测到车辆右侧指定范围内存在自行车骑车人，车速在 0-30km/h 范围内且自行车骑行人速度在 5-20km/h 之间，满足一定条件通过小显示屏显示信息信号

及报警信号提示驾驶员注意行车安全。

The Blind Spot Information Prompt System (BSIS) is based on the vehicle's forward-facing top fisheye camera, right-side mirror camera, and right-side fisheye camera. It perceives information about cyclists within a specified range on the right side of the vehicle. When a cyclist is detected within this specified range while the vehicle speed is between 0-30 km/h and the cyclist's speed is between 5-20 km/h, the system displays information signals and alarm signals on a small screen to alert the driver to pay attention to driving safety.

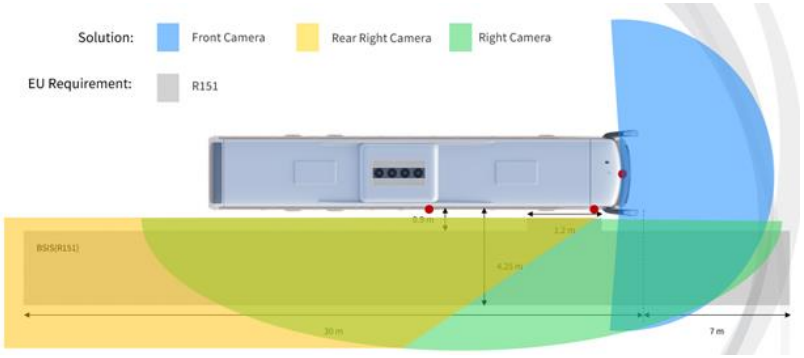

图 98 盲点信息提示系统示意图

Figure 99 BSIS System Schematic Diagram

车辆上电后，盲点信息提示系统（BSIS）功能会自检，仪表会出现 BSIS 故障灯，常亮 3-5s 后，若系统无故障，则 BSIS 故障灯熄灭。若系统存在故障，BSIS 故障灯常亮，车辆重新启动后，该故障仍然存在。

When the vehicle is powered on, the Blind Spot Information Prompt System (BSIS) performs a self-check, and the instrument panel will display the BSIS fault light, which will stay on for 3-5 seconds. If there is no fault in the system, the BSIS fault light will turn off. If there is a fault in the system, the BSIS fault light will remain on, and the fault will persist after restarting the vehicle.



图 99 BSIS 故障灯

Figure 100 BSIS Fault Light

驾驶员可以通过长按 2S 驾驶座左侧的 BSIS 开关，手动停用报警提示声音，此时仪表 BSIS 故障图标连续闪烁一段时间后，故障图标将熄灭。停用报警提示声音后，驾驶员可以使用相同的方法（长按 2S 驾驶座左侧的 BSIS 开关）重新开启报警提示声音。车辆重新启动后，报警提示声音将默认为启用状态。

The driver can manually disable the alarm sound by pressing and holding the BSIS switch located on the left side of the driver's seat for 2 seconds. At this time, the BSIS fault icon on the instrument panel will flash continuously for a period, after which the fault icon will turn off. After disabling the alarm sound, the driver can

use the same method (pressing and holding the BSIS switch for 2 seconds) to re-enable the alarm sound. After the vehicle is restarted, the alarm sound will default to enabled.

盲点信息提示系统（BSIS）为了向驾驶员提供更有效的指示，车辆右侧的盲点分为三个区域：右前、右和右后，并使用以下信息图标进行指示。

To provide more effective indications to the driver, the right side blind spot is divided into three areas: right front, right, and right rear, indicated by the following information icons.

当右侧一定的监测范围内检测到自行车骑行人时，将触发黄色 BSIS 信息信号

When a cyclist is detected within a certain monitoring range on the right side, a yellow BSIS information signal will be triggered.

右前 BSIS 信息信号

Right Front BSIS Information Signal

右 BSIS 信息信号

Right BSIS Information Signal

右后 BSIS 信息信号

Right Rear BSIS Information Signal

当车速在 1-30km/h 区间范围内，自行车骑行人以 5-20km/h 的车速进入警告信号触发区域范围内且存在碰撞风险，将触发红色 MOIS 报警信号及报警声音。

When the vehicle speed is within the range of 1-30 km/h, and the cyclist enters the warning signal trigger zone at a speed of 5-20 km/h, posing a collision risk, a red BSIS alarm signal and alarm sound will be triggered.



右前 BSIS 报警信号

Right Front BSIS Alarm Signal



右 BSIS 报警信号

Right BSIS Alarm Signal



右后 BSIS 报警信号

Right Rear BSIS Alarm Signal

2. 注意事项及限制

2. Precautions and Limitations

盲点信息提示系统并非总能检测到车辆右侧自行车骑行人，多种原因都可能会导致发生不必要、不准确或无效的警告或遗漏警告，包括但不限于以下情况：

The Blind Spot Information Prompt System may not always detect cyclists on the right side of the vehicle. Various factors may lead to unnecessary, inaccurate, or invalid warnings or missed warnings, including but not limited to the following situations:

（1）摄像头被遮挡、脏污或故障；

(1) One or more cameras are blocked, dirty, or malfunctioning;

（2）夜晚识别能力降低；

(2) Reduced recognition ability at night;

（3）周围环境昏暗，如黎明、黄昏、夜间、隧道中；

(3) Surrounding environment is dim, such as at dawn, dusk, night, or in a tunnel;

（4）周围环境亮度突变，如隧道入口或出口；

(4) Sudden changes in surrounding brightness, such as at the entrance or exit of a tunnel;

（5）建筑物、风景或者大型车辆投下的大片阴影；

(5) Large shadows cast by buildings, landscapes, or large vehicles;

（6）摄像头被太阳斜射、被光直射时；

(6) Camera is struck by oblique sunlight or direct light;

（7）雨、雪、雾、霾等恶劣天气；

(7) Adverse weather conditions such as rain, snow, fog, or haze;

（8）前方车辆扬起的尾气、水花、雪花或尘土等落到车辆上；

(8) Exhaust, water spray, snowflakes, or dust kicked up by vehicles in front landing on the vehicle;

（9）摄像头前的挡风玻璃上有水、灰尘、微划痕、油腻、脏污、雨刮器、冻结、降雪等；

(9) Water, dust, fine scratches, grease, dirt, wipers, freezing, or snow on the windshield in front of the camera;

（10）道路有急转弯；

(10) Sudden turns in the road;

（11）接近或者通过道路转弯时可能会误选或者漏选目标；

(11) Approaching or turning on the road may cause misclassification or missed targets;

（12）处于坡上可能会丢失目标或者误判与目标之间的距离；

(12) Being on an incline may cause loss of targets or misjudgment of the distance to targets;

（13）自行车骑行人突然出现，可能无法及时识别；

(13) Sudden appearance of cyclists may not be recognized in time;

3. 声明

3. Disclaimer

盲点信息提示系统仅在车速为0～30km/h的状态下识别车辆右侧速度为5-20km/h的自行车骑行人，当车速或自行车骑行人速度超过此范围、驾驶员挂倒挡、系统故障等状态下，系统不工作。路况和天气

等情况均可能对盲点信息提示系统造成不利的影响，请务必谨慎驾驶。盲点信息提示系统并不能完全准确识别车辆右侧自行车骑行人，驾驶员应始终对确保车辆安全驾驶承担最终责任，请保持警觉，并时刻关注车辆所处路况，以便预测是否需要采取任何措施。

The Blind Spot Information Prompt System only recognizes cyclists on the right side traveling at speeds of 5-20 km/h when the vehicle speed is between 0-30 km/h. The system will not function when the vehicle speed or the cyclist's speed exceeds this range, when the driver shifts into reverse, or in case of system faults. Road conditions and weather may adversely affect the Blind Spot Information Prompt System, so please drive with caution. The Blind Spot Information Prompt System cannot completely and accurately identify cyclists on the right side of the vehicle. The driver is always responsible for ensuring the safe operation of the vehicle. Please remain vigilant and constantly monitor the road conditions to anticipate any necessary actions.



该功能为欧盟地区必装功能。
This function is a mandatory feature in the EU region.
仪表显示或显示屏显示仅作示意，并不能完全反映真实的交通情况，因此，请勿依赖于仪表或显示屏的显示内容。
Instrument displays or screen displays are for illustrative purposes only and do not fully reflect real traffic conditions; therefore, do not rely solely on the information displayed on the instrument or screen.

2.3.28.智能限速系统（ISA）

2.3.28. Intelligent Speed Assistance System (ISA)

1. 功能说明

1. Function Description

智能限速系统（ISA）可以自动检测道路上的道路交通标志信息，主要包括显性限速信息、条件限速信息、隐性限速信息、限速辅助标志等道路标志信息，将限速信息发送到显示器上提醒驾驶员，若驾驶员行驶车速超过限速信息，将通过预警提示声音及限速信息提醒驾驶员及时将速度调整到道路限速范围内。

The Intelligent Speed Assistance System (ISA) can automatically detect traffic sign information on the road, including explicit speed limit information, conditional speed limit information, implicit speed limit information, and speed limit auxiliary signs. The system sends the speed limit information to the display to remind the driver. If the vehicle speed exceeds the indicated speed limit, the system will provide a warning sound and a speed limit reminder to prompt the driver to adjust the speed within the road limit.

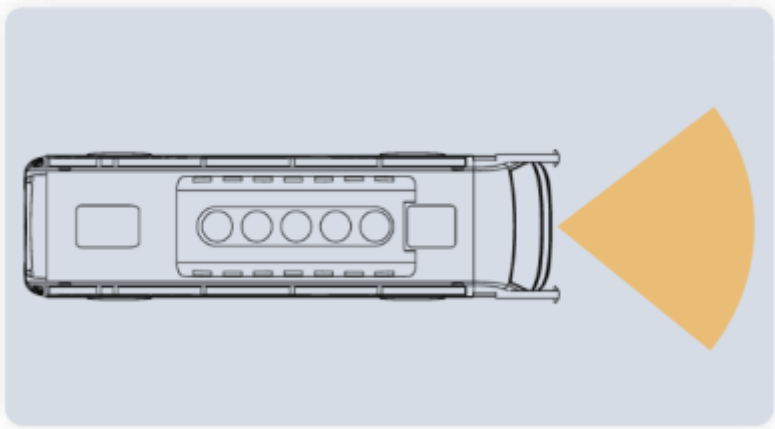

图 100. 智能限速系统示意图

Figure 101. ISA System Schematic Diagram

车辆上电后，智能限速系统（ISA）功能会自检，仪表会出现 ISA 故障灯，常亮 3-5s 后，若系统无故障，则 ISA 故障灯熄灭。若系统存在故障，ISA 故障灯常亮，车辆重新启动后，该故障仍然存在。

When the vehicle is powered on, the Intelligent Speed Assistance System (ISA) performs a self-check, and the instrument panel will display the ISA fault light, which will stay on for 3-5 seconds. If there is no fault in the system, the ISA fault light will turn off. If there is a fault in the system, the ISA fault light will remain on, and the fault will persist after restarting the vehicle.



ISA 故障灯

ISA Fault Light

驾驶员可以通过长按 2S 驾驶座左侧的 ISA 开关，手动停用报警提示声音，此时仪表 ISA 故障图标连续闪烁一段时间后，故障图标将熄灭。停用报警提示声音后，驾驶员可以使用相同的方法（长按 2S 驾驶座左侧的 ISA 开关）重新开启报警提示声音。车辆重新启动后，报警提示声音将默认为启用状态。

The driver can manually disable the alarm sound by pressing and holding the ISA switch located on the left side of the driver's seat for 2 seconds. At this time, the ISA fault icon on the instrument panel will flash continuously for a period, after which the fault icon will turn off. After disabling the alarm sound, the driver can use the same method (pressing and holding the ISA switch for 2 seconds) to re-enable the alarm sound. After the vehicle is restarted, the alarm sound will default to enabled.

当车辆处于 D 档，ISA 功能开启且仪表上无 ISA 故障灯，则 ISA 功能处于激活状态。当系统未识别到限速信息，通过驾驶员右手边提示器显示无限速信息图标，直至系统识别到限速信息，提示器常亮显

示限速提示图标。若驾驶员驾驶速度超过限速信息时，限速提示图标闪烁 4s 后，声音报警开始，同时限速提示图标继续闪烁。

When the vehicle is in drive (D) and the ISA function is activated with no ISA fault light displayed on the instrument panel, the ISA function is in an active state. When the system fails to recognize speed limit information, an unlimited speed information icon will be displayed on the prompt indicator to the right of the driver until the system recognizes the speed limit information, at which point the prompt indicator will continuously display the speed limit icon. If the driver exceeds the speed limit information, the speed limit icon will flash for 4 seconds, and the audio alarm will begin while the speed limit icon continues to flash.



无限速信息

Unlimited Speed Information



限速提示

Speed Limit Reminder

2. 注意事项及限制

2. Precautions and Limitations

智能限速系统（ISA）并非总能识别限速标识，多种原因都可能会导致发生不必要、不准确或无效的警告或遗漏警告，包括但不限于以下情况：

The Intelligent Speed Assistance System (ISA) may not always recognize speed limit signs. Various factors can lead to unnecessary, inaccurate, or invalid warnings or missed warnings, including but not limited to the following situations:

(1) 摄像头被遮挡、脏污或故障；

(1) One or more cameras are blocked, dirty, or malfunctioning;

(2) 雨、雪、雾、霾等恶劣天气；

(2) Adverse weather conditions such as rain, snow, fog, or haze;

(3) 前方车辆扬起的尾气、水花、雪花或尘土等落到车辆上；

(3) Exhaust, water spray, snowflakes, or dust kicked up by vehicles in front landing on the vehicle;

(4) 摄像头前的挡风玻璃上有水、灰尘、微划痕、油腻、脏污、雨刮器、冻结、降雪等；

(4) Water, dust, fine scratches, grease, dirt, wipers, freezing, or snow on the windshield in front of the camera;

(5) 限速标识不清晰或被遮挡；

(5) Speed limit signs are unclear or obstructed;

(6)地图未更新、天线故障，地图设备故障等；

(5) Speed limit signs are unclear or obstructed;

3. 声明

3. Disclaimer

智能限速系统（ISA）能够自动检测道路上的道路限速标志信息，当驾驶员挂倒挡、系统故障等状态下，系统不工作。路况和天气等情况均可能智能限速（ISA）功能可能存在误报和漏报等异常情况，因此会导致未能及时有效的提醒驾驶员或者错误引导驾驶员注意当前限速情况，请务必谨慎驾驶。驾驶员应始终对确保车辆安全驾驶承担最终责任，实时关注行车路段实际速度限制情况，主动遵守交通法规，请保持警觉，并时刻关注车辆所处路况，以便预测是否需要采取任何措施。

The Intelligent Speed Assistance System (ISA) can automatically detect speed limit signs on the road. The system will not function when the driver shifts into reverse or in case of system faults. Road conditions and weather may lead to false alarms or missed warnings, which can prevent timely and effective reminders to the driver or incorrectly guide the driver regarding current speed limits. Therefore, please drive with caution. The driver is always responsible for ensuring the safe operation of the vehicle, continuously monitoring the actual speed limit of the road being traveled, and actively complying with traffic regulations. Please remain vigilant and constantly observe the road conditions to anticipate whether any measures need to be taken.

⚠注意
该功能为欧盟地区必装功能。 This function is a mandatory feature in the EU region. 仪表显示或显示屏显示仅作示意，并不能完全反映真实的交通情况，因此，请勿依赖于仪表或显示屏的显示内容。 Instrument displays or screen displays are for illustrative purposes only and do not fully reflect real traffic conditions; therefore, do not rely solely on the information displayed on the instrument or screen.

2.3.29.司机睡意和注意力警告（DDAW）

2.3.29. Driver Drowsiness and Attention Warning (DDAW)

1. 功能说明

1. Function Description

司机睡意和注意力警告（DDAW），通过安装在 A 柱上的摄像头传感器持续监控驾驶员状态并结合车辆的实时情况，目的是检测驾驶员困倦或是疲劳的迹象，提醒驾驶员安全驾车。当车辆速度超过 65km/h 时，系统自动启动。根据卡罗林斯卡嗜睡量表（KSS），系统判断睡意程度在 KSS 的 7 级或以上时，DDAW

系统通过仪表预警提示图标及声音向司机发出预警提示。

The Driver Drowsiness and Attention Warning (DDAW) system continuously monitors the driver's state using a camera sensor installed on the A-pillar, combined with real-time vehicle conditions, aiming to detect signs of drowsiness or fatigue in the driver and remind them to drive safely. The system automatically activates when the vehicle speed exceeds 65 km/h. According to the Karolinska Sleepiness Scale (KSS), when the drowsiness level is at 7 or above, the DDAW system alerts the driver through a warning icon and sound on the instrument panel.

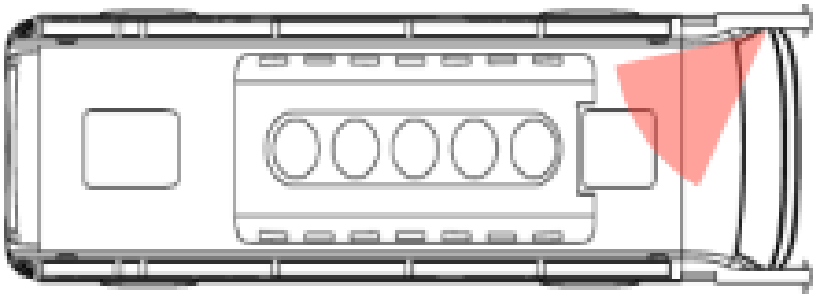

图 101. 司机睡意和注意力警告示意图

Figure 102. Driver Drowsiness and Attention Warning Schematic Diagram

等级	内容
1	警醒度非常高
2	非常警惕
3	比较警惕
4	有点警惕
5	既不警惕也不困倦
6	有一点困倦
7	困倦但不需要努力尚可保持清醒
8	困倦但可以努力尚可保持清醒
9	非常困倦需要极大努力保持清醒

卡罗林斯卡嗜睡量表（KSS）

Karolinska Sleepiness Scale (KSS)

车辆上电后，司机睡意和注意力警告（DDAW）功能会自检，仪表会出现 DDAW 故障灯，常亮 3-5s 后，若系统无故障，则 DDAW 故障灯熄灭。若系统存在故障，DDAW 故障灯常亮，车辆重新启动后，该故障仍然存在。

When the vehicle is powered on, the DDAW function performs a self-check, and the instrument panel will display the DDAW fault light, which will remain on for 3-5 seconds. If there is no fault in the system, the DDAW

fault light will turn off. If there is a fault in the system, the DDAW fault light will remain on, and the fault will persist after restarting the vehicle.



DDAW 故障灯

DDAW Fault Light

驾驶员可以通过按下仪表台右侧的 DDAW 开关，手动停用报警提示声音，此时仪表显示 DDAW 报警声音取消图标。停用报警提示声音后，驾驶员可以使用相同的方法（按下仪表台右侧的 DDAW 开关），重新开启报警提示声音。车辆重新启动后，报警提示声音将默认为启用状态。

The driver can manually disable the alarm sound by pressing the DDAW switch located on the right side of the instrument panel. At this time, the instrument will display an icon indicating that the DDAW alarm sound has been canceled. After disabling the alarm sound, the driver can use the same method (pressing the DDAW switch on the right side of the instrument panel) to re-enable the alarm sound. After restarting the vehicle, the alarm sound will default to enabled.



DDAW 报警声音关闭

DDAW Alarm Sound Disabled

当车辆速度超过 65km/h 时，系统判断睡意程度在 KSS 的 7 级或以上时，DDAW 系统通过仪表预警提示图标及声音向司机发出预警提示。

When the vehicle speed exceeds 65 km/h and the system determines that the drowsiness level is at KSS 7 or above, the DDAW system will alert the driver with a warning icon and sound on the instrument panel.





DDAW-7 级疲劳　DDAW-8 级疲劳　DDAW-9 级疲劳

DDAW Level 7 Fatigue　DDAW Level 8 Fatigue　DDAW Level 9 Fatigue

2. 注意事项及限制

2. Precautions and Limitations

在某些情况下，可能影响或无法监测到驾驶员睡意等情况，多种原因都可能会导致发生不必要、不准确或无效的警告或遗漏警告，包括但不限于以下情况：

In certain situations, the system may be affected or unable to monitor the driver's

drowsiness, and various factors may lead to unnecessary, inaccurate, or invalid warnings or missed warnings, including but not limited to the following situations:

（1） 摄像头被遮挡、脏污或故障；

(1) One or more cameras are blocked, dirty, or malfunctioning;

（2）眼睛有遮挡的情况下，包括但不限于透光率较低的各类墨镜、偏光镜、太阳镜，以及眼镜边框遮挡等；

(2) Eyes are obstructed, including but not limited to various types of sunglasses, polarized glasses, and eyewear with low light transmittance, as well as obstruction by glasses frames;

（3）戴帽子、围巾、头巾等可能会改变头部形状的配饰；

(3) Accessories that may alter the shape of the head, such as hats, scarves, or head wraps;

（4）戴口罩；

(4) Wearing a mask;

（5）驾驶员头部被遮挡；

(5) The driver’s head is obscured;

3、声明

3. Disclaimer

司机睡意和注意力警告系统，仅用作辅助设备。驾驶员应始终对确保车辆安全驾驶承担最终责任，专注驾驶以及适时停车休息非常重要。在出现驾驶疲倦等不良行为迹象时，驾驶员需要及时调整驾驶行为确保驾驶出行安全。

The Driver Drowsiness and Attention Warning system is intended as an auxiliary device. The driver is always responsible for ensuring the safe operation of the vehicle, and it is crucial to focus on driving and take breaks as needed. When signs of fatigue or other unsafe driving behaviors occur, the driver should promptly adjust their driving behavior to ensure safe travel.

⚠注意
该功能为欧盟地区必装功能。 This function is a mandatory feature in the EU region. 仪表显示或显示屏显示仅作示意，并不能完全反映真实的交通情况，因此，请勿依赖于仪表或显示屏的显示内容。 Instrument displays or screen displays are for illustrative purposes only and do not fully reflect real traffic conditions; therefore, do not rely solely on the information displayed on the instrument or screen.

2.3.30.酒精互锁系统

2.3.30. Alcohol Interlock System

车辆上高压后，需要从支架上取下手持酒精互锁机，对准背面吹气嘴，持续向吹嘴吹气，当检测到呼气酒精浓度低于设定值时，测试通过，机器显示请安全驾驶后，将手持机放回原处，这时可以正常行驶，反之，车辆不能正常行驶。详见酒精互锁系统使用说明书。

After the vehicle is powered on, the handheld alcohol interlock device must be removed from the bracket. Align the blowing nozzle with the mouthpiece and blow continuously into the nozzle. When the exhaled alcohol concentration is detected to be below the set value, the test passes, and the machine will display "Please Drive Safely." The handheld device can then be placed back in its original position, allowing the vehicle to operate normally. If the test fails, the vehicle cannot be operated normally. For detailed instructions, please refer to the alcohol interlock system user manual.



图 102 酒精互锁系统示意图

Figure 103. Alcohol Interlock System Schematic Diagram

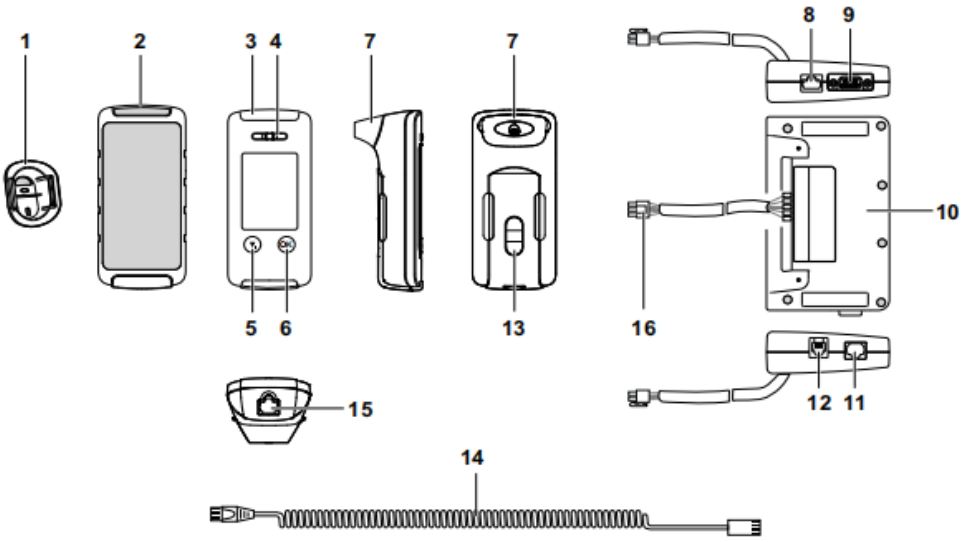

图 103 酒精互锁系统示意图

Figure 104. Alcohol Interlock System Schematic Diagram

1. 手持机的支架 1.Handheld Device Bracket	2. 手持机的保护壳 2. Handheld Device Protective Case	3. LED	4. 出气口 4. Exhalation Port
5. 向下/菜单按钮 5.Down/Menu Button	6. OK 按钮 6.OK Button	7. 吹管 7.Blow Tube	8. 扩展盒接口 8.Expansion Box Interface
9. 无线模块（LTE、GPRS）接口 9.Wireless Module (LTE, GPRS) Interface	10. 控制单元 10.Control Unit	11. 螺旋电缆插头连接器的插口 11.Spiral Cable Plug Connector Port	12. 摄像头接口 12.Camera Interface
13. 红外接口 13.Infrared Interface	14. 螺旋电缆 14,Spiral Cable	15. 螺旋电缆插头连接器的插口 15.Spiral Cable Plug Connector Port	16. 机动车接口 16.Motor Vehicle Interface

2.4.新能源部件

2.4. New Energy Components

该车型为新能源纯电动城市客车，采用永磁同步电机驱动，直驱方式。控制系统配置集成式控制器，内部集成：驱动控制器（MCU）、高压 配电箱（PDU）、空压机控制器、助力油泵控制器、DC-DC等，集成度高，采用液冷方式，工作效率高，系统稳定可靠，整机防护等级 IP67。

This model is a pure electric city bus driven by a permanent magnet synchronous motor using a direct drive method. The control system is equipped with an integrated controller that incorporates: a drive controller (MCU), a high-voltage distribution box (PDU), an air compressor controller, a power-assist oil pump

controller, and a DC-DC converter, among others. This high level of integration utilizes a liquid cooling method, ensuring high operational efficiency and reliable system stability. The overall protection rating of the vehicle is IP67.

新能源部件主要指：整车控制器 VCU、集成式控制器、驱动电机、动力电池系统以及电动空压机和电动助力油泵等。

The new energy components mainly refer to: the vehicle control unit (VCU), integrated controller, drive motor, power battery system, as well as the electric air compressor and electric power-assist oil pump, etc.

2.4.1.整车控制器（VCU）

2.4.1. Vehicle Control Unit (VCU)



图 104 整车控制器 VCU 示意图

Figure 105: Vehicle Control Unit VCU Diagram



图 105 整车控制器 VCU 示意图

Figure 106: Vehicle Control Unit VCU Diagram



图 106 整车控制器 VCU 示意图

Figure 107: Vehicle Control Unit VCU Diagram

功能：用于执行整车控制策略，解释驾驶员意图，进行故障诊断及处理，监控电控系统运行状态等，控制整车各控制单元模块稳定、高效、协同工作，为整车核心部件。

Function: The Vehicle Control Unit (VCU) is responsible for executing overall vehicle control strategies, interpreting driver intentions, performing fault diagnosis and handling, and monitoring the

operational status of the electronic control system. It ensures the stable, efficient, and collaborative functioning of various vehicle control unit modules, making it a core component of the vehicle.

类型：车规级控制单元，采用 CAN bus 通讯，具有高速 CAN 总线和低速 CAN 总线通讯功能，I/O 口隔离设计。

Type: It is an automotive-grade control unit that utilizes CANbus communication, featuring both high-speed and low-speed CAN bus communication capabilities, as well as an isolated design for the I/O ports.

2.4.2.集成式电控系统

2.4.2. Integrated Electronic Control System

集成式电控系统分为：四合一和五合一集成式控制器。

The integrated electronic control system is divided into two types: the four-in-one integrated controller and the five-in-one integrated controller.

一、四合一（集成式控制器）+ 驱动控制器（MCU）

I. Four-in-One (Integrated Controller) + Drive Controller (MCU)

集成式控制器由高压配电箱（PDU）、DC-DC、空压机控制器和助力泵控制器（EPS）集成一体组成。

The integrated controller consists of a high-voltage distribution box (PDU), DC-DC converter, air compressor controller, and power steering pump controller (EPS) integrated into one unit.



图 107 集成式控制器示意图

Figure 108: Schematic Diagram of Integrated Controller

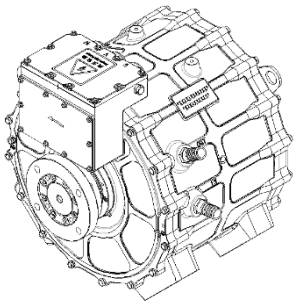

图 108 驱动电机示意图

Figure 109: Schematic Diagram of Drive Motor

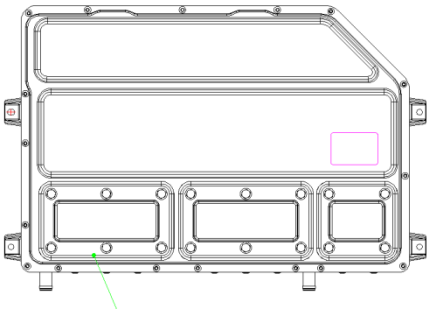

图 109 驱动控制器（MCU）示意图

Figure 110: Schematic Diagram of Drive Controller (MCU)

二、五合一（集成式控制器）

II. Five-in-One (Integrated Controller)

1. 系统说明

1. System Description

集成式控制器由驱动控制器（MCU）、高压配电箱（PDU）、DC-DC、空压机控制器和助力泵控制器（EPS）集成一体组成。其核心部分为驱动控制（MCU），用于控制驱动电机工作。驱动电机采用永磁同步电机，铝合金外壳，液冷散热，工作效率高。

The integrated controller consists of a drive controller (MCU), high-voltage distribution box (PDU), DC-DC converter, air compressor controller, and power steering pump controller (EPS) integrated into one unit. The core part is the drive controller (MCU), which is used to control the operation of the drive motor. The drive motor uses a permanent magnet synchronous motor with an aluminum alloy casing and liquid cooling for heat dissipation, providing high efficiency.



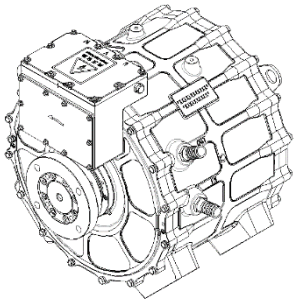

图 110 集成式控制器示意图　　图 111 驱动电机示意图

Figure 111: Schematic Diagram of Integrated Controller　　Figure 112: Schematic Diagram of Drive Motor

项目 Project	要求 Requirements	备注 Notes
集成方式 Integration Method	集成电机控制器、油泵控制器、气泵控制器、DC/DC、PDU Integrated motor controller, oil pump controller, air pump controller, DC/DC, PDU	不包括绝缘检测仪 Does not include insulation testing device

项目 Project	要求 Requirements	备注 Notes
控制器输入电压范围 Controller Input Voltage Range	DC 350V～750V DC 350V～750V	
防护等级 Protection Level	IP67	1 米水深 30min 1 meter water depth for 30 minutes
冷却方式 Cooling Method	液冷 Liquid cooling	50%/50%乙二醇水溶液防冻液 50%/50% ethylene glycol-water solution for antifreeze
水嘴规格 Water Outlet Specifications	外径 25mm，内径 21mm Outer diameter 25mm, inner diameter 21mm	
水阻 Water Resistance	30L/min @55℃ 31Kpa	
控制器通讯方式 Controller Communication Method	AN2.0，ISO11898 标准开发，通讯速率 250kbps AN2.0,developed according to ISO11898 standard, communication speed 250kbps	通讯协议满足 J1939，两路 CAN，主驱 500kbps，辅驱 250kbps Communication protocol meets J1939, two CAN channels, main driver 500kbps, auxiliary driver 250kbps
系统低压控制电源 System Low Voltage Control Power	DC24V	范围：18V～32V Range: 18V～32V
控制器重量 Controller Weight	≤35kg	±0.5 kg
安装方式 Installation Method	正装 Upright installation	

2. 系统特点

2. System Features

(1)技术先进，集成度高，功率密度高，环境适应性强，寿命长；

(1) Advanced technology, high integration, high power density, strong environmental adaptability, and long lifespan.

(2)集成度高，结构紧凑，系统效率高；

(2) High integration and compact structure, leading to high system efficiency.

(3)EPS 兼容双源方案，提高整车安全性；

(3)EPS compatible with dual-source solutions, enhancing overall vehicle safety.

(4)汽车级器件，提高系统可靠性；

(4) Automotive-grade components that improve system reliability.

(5)整机 24V 防反接，提高系统安全性；

(5) The entire system features 24V reverse polarity protection, enhancing system safety.

(6)环境适应性强，高防护等级 IP68；

(6) Strong environmental adaptability with a high protection rating of IP68.

(7)液体冷却方式，控制器过载能力强、功率密度

(7) Liquid cooling method, enabling strong overload capacity and power density for the controller.

(8)CAN 总线内网、星型构架，提高网络安全。

(8) CAN bus internal network with a star topology, improving network security.

(9)系统具备过流、过压、欠压、缺相等保护功能，还具备限功率输出、高压互锁等功能。

(9) The system includes protections against overcurrent, overvoltage, undervoltage, and phase loss, as well as features like power output limitation and high-voltage interlock.

3. 系统电路结构及接口定义

3. System Circuit Structure and Interface Definition

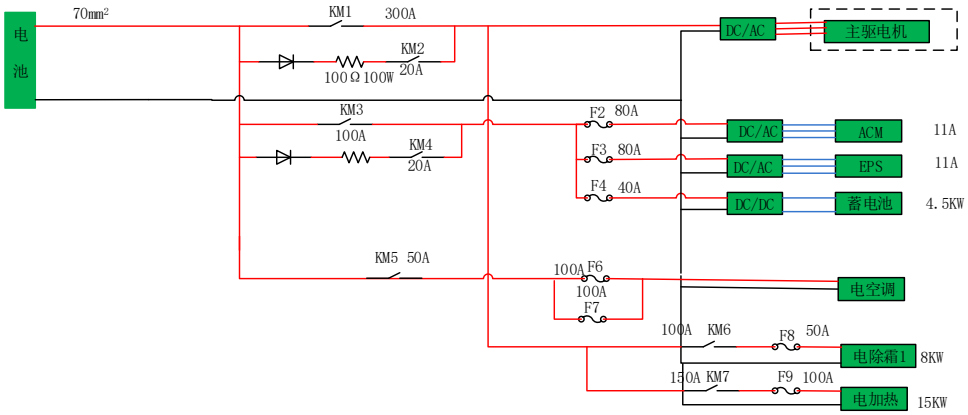

图 112 系统电路结构示意图

Figure 113: System Circuit Structure Diagram

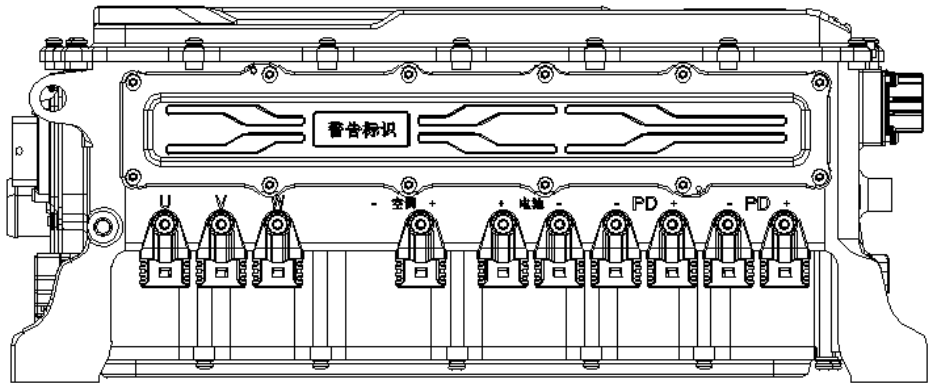

图 113 端子接口定义示意图

- Figure 114: Terminal Interface Definition Diagram

警告

- 请勿触摸控制器任何输入输出端口及周边电路，否则有触电危险。
- Do not touch any input/output ports or surrounding circuits of the controller, as there is a risk of electric shock.
- 请勿触摸控制器外壳以试探温度，否则可能引起灼伤。
- Do not touch the controller's housing to test the temperature, as this may cause burns.
- 控制器上电以后，请勿强制关断外部高、低压供电，需按照正规的下电顺序对整车、控制器进行下电。
- After powering on the controller, do not forcibly disconnect the external high or low voltage power supply. Follow the proper power-down sequence to safely power down the vehicle and controller.
- 请勿采用接触器通断的方法来控制控制器的启停，否则引起设备损坏。
- Do not use contactors to control the start and stop of the controller, as this may cause equipment damage.
- 请勿随意更改控制器厂家参数，否则可能造成设备的损害。
- Do not arbitrarily modify the manufacturer's parameters of the controller, as this may lead to equipment damage.

2.4.3.动力电池系统

2.4.3. Power Battery System



图 114 动力电池箱示意图

Figure 115: Power Battery Box Diagram



图 115 电池控制箱示意图



图 116 电池高压箱 BDU 示意图

Figure 116: Battery Control Box Diagram

Figure 117: Battery High Voltage Box (BDU) Diagram

1. **构成：**动力电池箱、电池控制箱、电池高压箱（BDU）

1. Composition: Power battery box, battery control box, and battery high voltage box (BDU).

2. **功能**:为整车提供动力系统提供能量,是整车能量存储单元。电池控制箱内置 BMS 管理系统和电池监控模块等。电池高压箱（BDU）设计有检修开关、熔断器和高压接触器、内置绝缘检测模块，外接充电接口。

2. Function: Provides energy for the vehicle's power system, serving as the energy storage unit for the vehicle. The battery control box is equipped with a built-in BMS management system and battery monitoring module. The battery high voltage box (BDU) is designed with a maintenance switch, fuse, and high voltage contactor, as well as a built-in insulation detection module and external charging interface.

3. **类型：**磷酸铁锂电池。采用集成式标准电池箱，设计有液冷散热结构（根据环境需要选装冷却机组），可安装箱内灭火装置（选装配置）。

3. Type: Lithium iron phosphate battery. Utilizes an integrated standard battery box with a liquid cooling structure (a cooling unit can be selected based on environmental needs), and can be equipped with an internal fire extinguishing device (optional configuration).

4. **防护：**动力电池箱体防护等级 IP69，壳体及接线端子采用防水结构，具有一定抗机械冲击能

力。

4. Protection: The power battery box has an IP69 protection rating, with a waterproof structure for the shell and terminal connections, offering a certain level of mechanical shock resistance.

警告

●请勿触摸高压部件任何输入输出端口及周边电路，否则有触电危险。

●Do not touch any input/output ports or surrounding circuits of high-voltage components to avoid the risk of electric shock.

●请勿触随意触摸动力电池、高压配电箱外壳，以免有触电安全风险。

●Do not casually touch the outer shell of the power battery or high-voltage distribution box to avoid electric shock safety risks.

●动力电池馈电时严禁强行行车，应及时补电，否则影响电池安全使用，缩短使用寿命。

●It is strictly prohibited to drive the vehicle when the power battery is discharged. Timely recharging is required; otherwise, it may affect battery safety and shorten its lifespan.

●气温过低使用动力电池时，系统启动加热功能，此时应避免大电流放电，否则会造成电池损伤，应等待加热一定时间，后启动车辆行车。

●When using the power battery in excessively low temperatures, the system will initiate a heating function. Avoid large current discharges during this time, as it may damage the battery. Wait for a certain period for heating before starting to drive the vehicle.

●请勿随意更改动力电池系统有关厂家参数，否则可能造成产品的损害。

●Do not arbitrarily change the manufacturer parameters related to the power battery system, as it may damage the product.

●任何情况下禁止非专业人士拆解动力电池及高压附件。

●Under no circumstances should non-professionals disassemble the power battery and high-voltage accessories.

●使用和保养请严格按照实车配置动力电池厂家提供的使用维护手册进行。

●Use and maintenance must strictly follow the operating and maintenance manual provided by the power battery manufacturer configured for the actual vehicle.

2.4.4.电动空压机总成

2.4.4. Electric Air Compressor Assembly

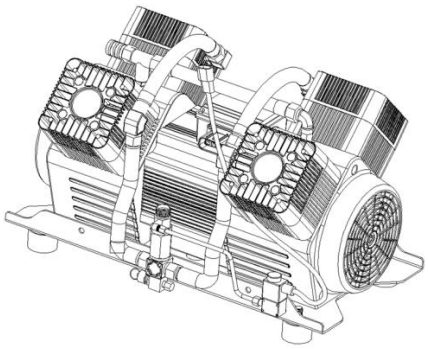

图 117 无油活塞式空压机示意图

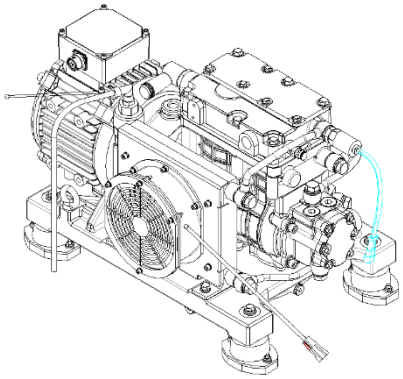

图 118 有油活塞式空压机示意图

Figure 118: Oil-Free Piston Air Compressor Diagram

Figure 119: Oil-Filled Piston Air Compressor Diagram

1. **功能**：电动空压机由多合一控制总成中空压机控制器控制，给整车提供压缩空气，保障制动系统、气囊悬挂及乘客车门正常工作。

1. **Function:** The electric air compressor is controlled by the air compressor controller within the multi-functional control assembly. It provides compressed air for the vehicle, ensuring the normal operation of the braking system, air suspension, and passenger doors.

2. **类型**：无油活塞式、有油活塞式等。

2. Type: Oil-free piston type, oil-filled piston type, etc.

警告
请勿触摸高压部件任何输入输出端口及周边电路，否则有触电危险。 Do not touch any input/output ports or surrounding circuits of high-voltage components to avoid the risk of electric shock.

2.4.5.电动转向油泵系统

2.4.5. Electric Power Steering Oil Pump System

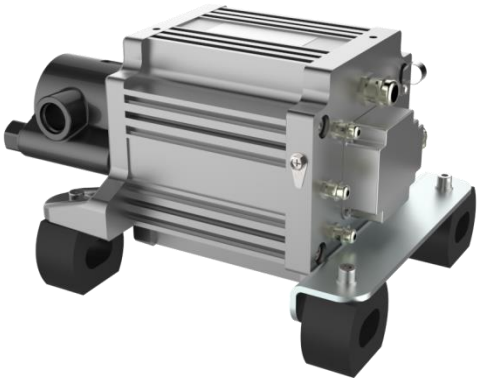

图 119 电动助力油泵示意图

Figure 120: Electric Power Steering Pump Diagram

车辆配置电动液压助力转向系统，该系统由电动助力油泵、油壶、管道、动力转向器等组成，是一个灵敏度很高的液压随动系统。在使用中必须严格按照规定进行使用和保养，以保持其完好的技术状态、延长其使用寿命。

The vehicle is equipped with an electric hydraulic power steering system, which consists of an electric power steering pump, oil reservoir, pipelines, and power steering gear. This system is a highly sensitive hydraulic follow-up system. It is essential to strictly follow the specified usage and maintenance procedures to maintain its technical condition and prolong its service life.

该系统中电动助力油泵分为单源和双源类型，当车辆配置单源助力油泵时，供电电源由高压动力电池提供。当车辆配置双源助力油泵时，供电电源由高压动力电池和低压蓄电池共同提供，常态下由高压动力电池供电，当动力电池故障需要下电时，自动切换到低压蓄电池供电，并保证助力油泵能继续工作不小于 30s 时间。

In this system, the electric power steering pump is available in single-source and dual-source types. When the vehicle is equipped with a single-source power steering pump, the power supply is provided by the high-voltage power battery. When the vehicle is equipped with a dual-source power steering pump, the power supply is provided jointly by the high-voltage power battery and the low-voltage storage battery. Under normal conditions, power is supplied by the high-voltage power battery, and when the power battery fails and needs to be shut down, the system automatically switches to power from the low-voltage storage battery, ensuring that the power steering pump can continue to operate for no less than 30 seconds.



●严禁长时间将转向盘打到极限位置，最长时间不超过 5s，避免长时间高压冲击液压系统的密封零部件，延长液压系统零部件的使用寿命。

●Do not keep the steering wheel turned to its limit position for extended periods; the maximum duration should not exceed 5 seconds. This helps avoid prolonged high-pressure impacts on the hydraulic system's sealing components, thereby extending the lifespan of the hydraulic system components.

●当转向轮已经转到极限位置（前轮转角限位螺栓起作用或转向限位阀起作用），严禁继续向转向盘上施加作用力，以减少对转向系零部件的附加负载。

●When the steering wheel has reached its limit position (either due to the action of the front wheel angle limit bolt or the steering limit valve), do not apply further force to the steering wheel to reduce the additional load on the steering system components.

2.4.6.除霜及暖风

2.4.6. Defrosting and Heating

1、电除霜器及电暖风机

1. Electric Defroster and Electric Heater





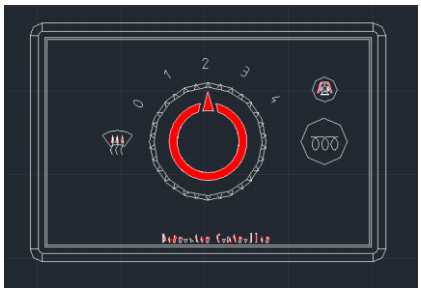

图 120 除霜器开关示意图　　图 121 暖风机开关示意图　　图 122 四档风速调节开关示意图

Figure 121: Defroster Switch Diagram　　Figure 122: Heater Switch Diagram

Figure 123: Four-speed Fan Speed Adjustment Switch Diagram





图 123 电除霜器示意图　　图 124 电暖风机示意图

Figure 124: Electric Defroster Diagram　　Figure 125: Electric Heater Diagram

车辆安装有高压电源供电的电除霜器，用于前风挡玻璃除霜、除雾，保证驾驶的安全，安装位置一般位于车头前中网内。在高压上电情况下，通过仪表台翘板开关控制，分低速和高速两档。

The vehicle is equipped with an electric defroster powered by a high-voltage power supply, used for defrosting and demisting the front windshield to ensure safe driving. It is generally installed in the front grille area. When powered on, it is controlled via a toggle switch on the dashboard and operates in low-speed and high-speed modes.

车辆视运行区域不同会选装电暖风机，安装位置和数量视实车配置。可通过仪表台暖风机翘板开关控制，暖风机采用高压电源工作，一般采用 2 只开关左右分开控制。

Depending on the operating area, the vehicle may be equipped with an electric heater, with the installation location and quantity depending on the actual vehicle configuration. It can be controlled via the

dashboard heater toggle switch. The heater operates on high-voltage power and typically has two switches that control the left and right sides separately.

除霜器采用四档风速时，需专用四档风速调节开关。

When the defroster operates at four-speed settings, a dedicated four-speed adjustment switch is required.

环境温度适宜时建议关闭除霜器或暖风机，可以节约电量增加续驶里程；除霜器或暖风机进水时，严禁开启，应处理进水，并测量绝缘符合要求时方可使用。

It is recommended to turn off the defroster or heater when the ambient temperature is suitable, as this can save electricity and increase driving range. The defroster or heater should not be turned on if water has entered the system; water ingress must be addressed, and insulation should be tested to ensure it meets safety requirements before use.

四档风速调节开关功能说明

Four-speed Adjustment Switch Function Description

（1）档位控制功能：

(1) Gear Control Function:

A. 控制器“0”档关闭，“1、2、3、4”档正常工作；

A. The controller “0” gear is off; “1, 2, 3, 4” gears are for normal operation.

B. 控制器关闭时，风机延时 20-30S 关闭；

B. When the controller is off, the fan will turn off after a delay of 20-30 seconds.

C. 控制器在“1、2、3、4”档工作时，打开加热器开关出热风，关闭加热器开关出冷风。

C. When the controller is operating in “1, 2, 3, 4” gears, turning on the heater switch will produce warm air, and turning it off will produce cold air.

（2）欠压过压保护功能：

(2) Under-voltage and Over-voltage Protection Function:

A. 欠压保护值：＜18V 欠压检测时间：3-5S，供电电压小于保护值时，控制器不工作且绿色 LED 灯闪烁。重新启动电源且电压在正常范围内则控制器恢复工作。

A. Under-voltage protection value: <18V. Under-voltage detection time: 3-5 seconds. If the supply voltage is less than the protection value, the controller will not operate, and the green LED will flash. The controller will resume operation when power is restarted and the voltage is within the normal range.

B. 过压保护值：＞32V 过压检测时间：3-5S，供电电压大于保护值时，控制器不工作且绿色 LED 灯闪烁。重新启动电源且电压在正常范围内则控制器恢复工作。

B. Over-voltage protection value: >32V. Over-voltage detection time: 3-5 seconds. If the supply voltage exceeds the protection value, the controller will not operate, and the green LED will flash. The controller will resume operation when power is restarted and the voltage is within the normal range.

(3) 风机开路保护功能：

(3) Fan Open Circuit Protection Function

控制器在“1-4”档工作时，将自动检测风机是否正常连接且工作，如不正常则关闭发热负载且绿色 LED 灯闪烁。

The controller will automatically check whether the fan is properly connected and operating when in gears “1-4.” If not, it will turn off the heating load and the green LED will flash.

(4) 上电指示功能：

(4) Power On Indication Function

蓝色线检测到外部有 DC24V 电压输入时，电源指示灯(白色 LED 灯)常亮。

When the blue wire detects external DC24V voltage input, the power indicator light (white LED) will be continuously lit.

2、独立水暖暖风系统

2. Independent Water Heating System

车辆装置独立水暖暖风系统，以燃油加热器为热源，防冻液为传热介质为车辆提供热量，用于乘客区及驾驶区采暖、前挡风玻璃除霜除雾；由燃油加热器、强制散热器、司机散热器、除霜器、循环水泵、膨胀水箱、防冻液、管路、油箱及油管、控制开关等组成。

The vehicle is equipped with an independent water heating system, using a fuel heater as the heat source and antifreeze as the heat transfer medium to provide warmth for the passenger area and driver’s area, as well as to defrost and demist the front windshield. It consists of a fuel heater, forced radiator, driver’s heater, defroster, circulation pump, expansion tank, antifreeze, pipelines, fuel tank and fuel lines, control switches, etc.

说明：

Notes:

●车辆视运行区域不同选装强制散热器，安装位置和数量视实车配置。

The vehicle may be equipped with a forced radiator depending on the operating area, with installation location and quantity depending on actual vehicle configuration.

●独立水暖暖风系统单独配置油箱，燃料为柴油（根据环境温度选用适当牌号柴油）。

The independent water heating system is equipped with a separate fuel tank, using diesel as fuel (appropriate grade of diesel should be selected based on ambient temperature).

●冷却液需满足车辆使用环境温度要求。

The coolant must meet the temperature requirements of the vehicle's operating environment.

●水暖系统中加热器上水泵和附加水泵由同一开关控制。

The heater's upper water pump and auxiliary water pump are controlled by the same switch.

●加热器控制与水泵是同一开关不同档位控制，当按开关一档时加热器不进行加热工作而仅仅水泵工作，当按开关二档时此时水泵与加热器同时开始工作。

The heater control and water pump operate on different settings of the same switch. When pressing the first setting, the heater will not heat, and only the water pump will operate. When pressing the second setting, both the water pump and heater will operate simultaneously.

●暖风加热器开关与强制散热器开关的打开与关闭无严格先后顺序。

There is no strict sequence for turning the heater switch and forced radiator switch on and off.

●暖风系统使用前，检查电路联结是否正常，燃油是否充足，循环系统内冷却介质是否缺少（补加循环液时必须打开循环水泵），进、排气口确保畅通；

Before using the heating system, check that electrical connections are normal, fuel is sufficient, and the circulation system does not lack coolant (the circulation pump must be turned on when adding circulation liquid). Ensure that the intake and exhaust ports are unobstructed.

●在电源指示灯熄灭前，禁止关闭加热器供电电源，以防止主机内过热损坏。

It is prohibited to turn off the power supply to the heater before the power indicator light goes out to prevent overheating damage to the main unit.





图 125 燃油加热器示意图

Figure 126: Fuel Heater Diagram

图 126 司机散热器示意图

Figure 127: Driver's Radiator Diagram





图 127 强制散热器示意图

Figure 128: Forced Radiator Diagram

图 128 强制散热器示意图

Figure 129: Forced Radiator Diagram

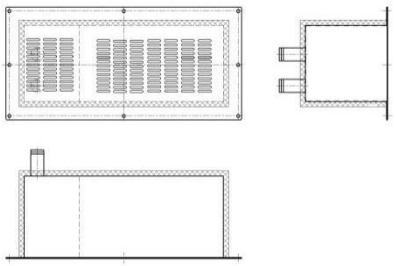



图 129 强制散热器示意图　　图 130 强制散热器示意图

Figure 130: Forced Radiator Diagram　　Figure 131: Forced Radiator Diagram



图 131 暖风开关示意图

Figure 132: Heater Switch Diagram

暖风加热器工作程序

Heater Work Procedure

（1）开机

(1) Startup

按下加热器开关一档，循环水泵工作，按下加热器开关二档，接通加热器电源，控制器检测电源电压、电磁阀、电机、火焰传感器、水温传感器等，如果加热器工作不正常，通过指示灯报警。

Press the first gear of the heater switch to activate the circulation water pump. Press the second gear of the heater switch to connect the heater power. The controller checks the power voltage, solenoid valve, motor, flame sensor, water temperature sensor, etc. If the heater operates abnormally, it will trigger an alarm through the indicator light.

（2）启动

(2) Starting

电机旋转带动助燃风扇和油泵工作，油泵电磁阀打开，燃料和空气混合气被点火电极点燃后在燃烧室中燃烧，加热器进入正常工作状态。

The motor rotates, driving the combustion fan and oil pump. The oil pump solenoid valve opens, and the fuel-air mixture is ignited by the ignition electrode in the combustion chamber, bringing the heater into normal

working status.

(3) 加热过程温度自动控制

(3) Temperature Control During Heating Process

加热器水温传感器自动控制加热器周期性工作，保持循环系统内冷却液在一定温度范围之内。当冷却液温度超过温度上限值，加热器自动停机；当冷却液温度低于温度下限值，加热器自动重新启动工作。

The heater's water temperature sensor automatically controls the periodic operation of the heater, maintaining the coolant within a specific temperature range in the circulation system. When the coolant temperature exceeds the upper temperature limit, the heater will automatically shut down; when the coolant temperature falls below the lower temperature limit, the heater will automatically restart.

(4) 关机

(4) Shutdown

关闭加热器开关二档，电磁阀关闭，火焰熄灭，助燃风扇继续运行 2-3 分钟关闭；

Turn off the second gear of the heater switch; the solenoid valve closes, extinguishing the flame, and the combustion fan continues to run for 2-3 minutes before shutting down.

关闭加热器开关一档，循环水泵停止工作。

Then, turn off the first gear of the heater switch, stopping the circulation water pump.

暖风散热器由仪表台上散热器开关控制开启或关闭。

The heater radiator is controlled by the radiator switch on the dashboard to turn it on or off.

2.4.7.充电插座

2.4.7. Charging Socket

1. 充电插座

1. **Charging Socket**

采用外接充电机补充电量，欧标直流充电插座。

The charging socket is designed for an external charger to supplement the power supply, using a European standard DC charging socket.

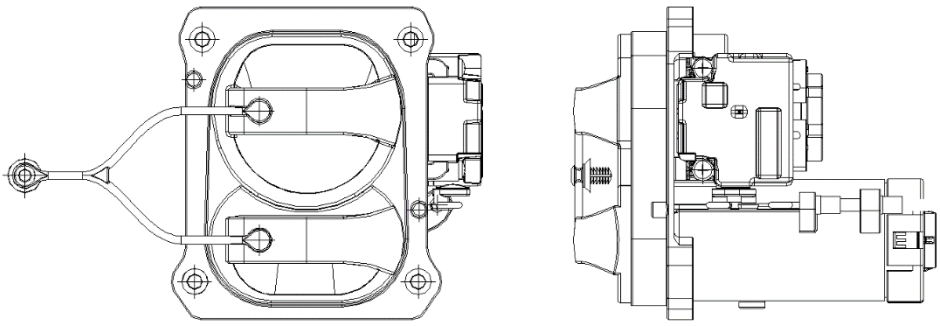

图 132 欧标充电口示意图

Figure 133: European Standard Charging Socket Diagram

2. 充电操作流程

2. Charging Operation Procedure

(1)巡检车辆一周，确认无异常状况；

(1) Conduct a thorough inspection of the vehicle to confirm there are no abnormal conditions.

(2)将钥匙拨到 OFF 档，确认驻车制动手柄拉起；

(2) Turn the key to the OFF position and ensure the parking brake lever is engaged.

(3)断开 24V 铅酸电池总电源（手动电源总开关）；

(3) Disconnect the main power supply from the 24V lead-acid battery (manual main power switch).

(4)插入充电枪，确认枪上的卡扣到位；

(4) Insert the charging plug, ensuring the latch on the plug is secured.

(5)打开充电机电源，自动充电检测。

(5) Turn on the power to the charger; automatic charging detection will occur.

(6)启动充电机，设置充电机参数，选择“自动充满”（各品牌型号充电桩显示形式可能不尽相同），确认后进入充电模式；

(6) Start the charger, set the charger parameters, and select "Auto Fill" (the display format may vary by charger brand and model). Confirm and enter charging mode.

(7)车辆充满电后充电机自动停止，系统显示充电完成，充电电流显示为 0 A，此时可断开充电枪，盖好充电插座盖，关闭充电仓门。

(7) After the vehicle is fully charged, the charger will automatically stop, the system will display "Charging Complete," and the charging current will read 0 A. At this point, the charging plug can be disconnected, the charging socket cover closed, and the charging compartment door shut.

(8)特殊情况下需要中途停止充电时，通过充电机选择“结束充电”，确认充电机上提示允许拔枪后，将充电枪拔出，然后盖上充电插座盖板，关闭充电仓门。

(8) In special circumstances where charging needs to be stopped midway, select "End Charging" on the charger. Once the charger indicates that it is safe to remove the plug, disconnect the charging plug, then close the charging socket cover and the charging compartment door.

3. 注意事项

3.Precautions

(1) 车辆运行时须实时关注仪表上显示的 SOC 数值, SOC 小于 30%时尽量避免急加速和高速行驶, 应立即寻找最近充电站或可以进行充电的地方进行充电。

(1) While the vehicle is in operation, continuously monitor the SOC (State of Charge) displayed on the instrument panel. If the SOC drops below 30%, avoid rapid acceleration and high-speed driving, and seek the nearest charging station or location for charging immediately.

(2) 当车辆运行结束停车后, 应检查仪表显示电池 SOC 状态、最低单体电压或欠压故障。如果 SOC 低于 20%、磷酸铁锂单体静态电压低于 2.90V, 或仪表已经显示相关单体欠压总压欠压故障, 应及时对电池进行充电。

(2) After parking the vehicle, check the instrument display for the battery SOC status, minimum single-cell voltage, or under-voltage faults. If the SOC is below 20%, or the static voltage of any lithium iron phosphate cell is below 2.90V, or if the instrument shows related under-voltage faults, charge the battery promptly.

(3) 必须使用符合车辆运营国家/地区标准的充电机。

(3) Only use chargers that comply with the national or regional standards for vehicle operation.

(4) 选择“自动充满”后电池充满会自动停止充电，充满时 SOC=100%，电流为零。如停止充电后显示信息不正确，请联系售后服务人员。

(4) When "Auto Fill" is selected, charging will automatically stop once the battery is fully charged, indicated by SOC = 100% and current = 0. If incorrect information is displayed after charging stops, please contact customer service.

(5) 充电时请使用“自动充电”功能，严禁使用“手动充电”功能，严禁带载拔枪。

(5) Always use the "Auto Charge" feature; manual charging is strictly prohibited, and do not unplug the charger while under load.

2.4.8.冷却系统（ATS）

2.4.8. Cooling System (ATS)

冷却系统（ATS）主要用于集成式控制器和驱动电机散热冷却，由ATS控制模块、散热水箱、电子扇、电动磁力水泵、膨胀水箱、水滤器、冷却液和管路等组成。系统采用低压24V电源供电，整车控制器VCU通过CAN总线控制ATS控制模块工作。

The Cooling System (ATS) is primarily used for the heat dissipation and cooling of the integrated controller and drive motor. It consists of the ATS control module, radiator, electronic fan, electric magnetic water pump, expansion tank, water filter, coolant, and piping. The system is powered by a low-voltage 24V power supply, and the vehicle control unit (VCU) controls the operation of the ATS control module via a CAN bus.

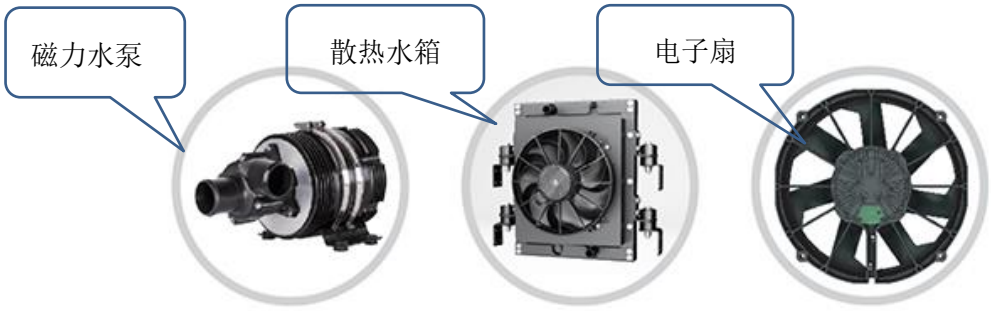

图 133 冷却系统部件示意图

Figure 134: Cooling System Component Diagram

1. ATS工作环境温度（℃）：-40℃～85℃；

1.ATS Operating Environment Temperature (°C): -40°C to 85°C.

2. 冷却液为乙二醇兑水，常规比例为1:1，视运行区域环境温度不同适当调整比例。

2.Coolant: Ethylene glycol mixed with water, with a standard ratio of 1:1, which may be adjusted according to the ambient temperature of the operating area.

3. 冷却介质温度（℃）：进水口温度≤65℃

3.Coolant Medium Temperature (°C): Inlet water temperature ≤ 65°C.

4. 冷却介质流量范围：10L/min～30L/min

4.Coolant Flow Rate Range: 10 L/min to 30 L/min.

5. 最大工作水压：2.5Bar

5.Maximum Working Water Pressure: 2.5 Bar.

ATS系统在仪表台设有强制启动使能开关，当控制单元无法正常工作时，特殊情况下可通过使能开关强制开启系统（ATS系统正常情况下不建议使用）。

The ATS system features a forced start enable switch on the instrument panel. In special circumstances, when the control unit cannot operate normally, the system can be forcibly activated via the enable switch (use of the ATS system in normal conditions is not recommended).

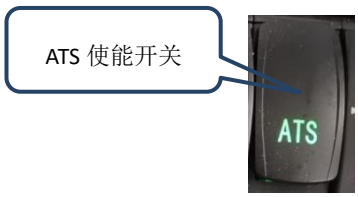

图 134　ATS使能开关示意图

Figure 135: ATS Enable Switch Diagram

⚠注意

当集成式控制器和电机停机后温度高时, ATS冷却系统会延时工作一定时间(一般5min左右，视设定参数)，此时不可切断低压供电，以免系统高温造成损伤。

When the integrated controller and motor are powered down and the temperature is high, the ATS cooling system will operate with a delay for a certain period (generally around 5 minutes, depending on set parameters). During this time, the low-voltage power supply should not be disconnected to avoid damage due to high temperatures in the system.

2.4.9.动力电池冷却系统（TMS）

2.4.9. Power Battery Cooling System (TMS)

车辆动力电池冷却系统采用空调集成式和独立冷却机组式两种配置。空调集成式与空调共用压缩机等部件，集成在顶置空调内，预留进出水口，其余部分部件和管路连接同独立式。

The vehicle's power battery cooling system is equipped with two configurations: integrated air conditioning and independent cooling units. The integrated air conditioning shares components, such as the compressor, with the air conditioning system and is housed within the rooftop air conditioning unit, with reserved inlet and outlet water ports. The remaining components and piping connections are similar to those of the independent system.





图 135 独立式冷却机组示意图　　图 136 空调集成式示意图

Figure 136: Schematic Diagram of Independent Cooling Unit

Figure 137: Schematic Diagram of Integrated Air Conditioning

1. 系统构成

1. System Composition

独立冷却机组式电池冷却管理系统（以下简称 TMS）主要由水泵、压缩机、板换、膨胀阀、冷凝风扇、冷凝器、高压线束、低压线、控制器、温度传感器，DC-DC 等部件组成。动力电池冷却系统（TMS）为非标配装置，一般根据运行环境温度选择。

The independent cooling unit battery cooling management system (hereinafter referred to as TMS) primarily consists of a water pump, compressor, plate heat exchanger, expansion valve, condenser fan, condenser, high-pressure harness, low-pressure line, controller, temperature sensors, DC-DC converter, and other components. The power battery cooling system (TMS) is a non-standard device and is typically selected based on the operating environmental temperature.

TMS 系统具有一种功能三种模式，一种功能为冷却电池,三种模式分别为关机模式、自循环模式、制冷模式。TMS 系统机组三种模式的切换受整车的 BMS 控制，BMS 将电池系统最高最低温度、设定目标水温及充放电模式等信息通过 CAN 总线发送至 TMS，TMS 依据收到的电池系统信息调节其工作模式。

The TMS system has one function with three modes. The function is to cool the battery, and the three modes are shutdown mode, self-circulation mode, and cooling mode. The switching between the three modes of the TMS system is controlled by the vehicle's Battery Management System (BMS). The BMS sends information such as the battery system's maximum and minimum temperatures, target water temperature, and charge/discharge modes to the TMS via the CAN bus. The TMS adjusts its operating mode based on the received battery system information.

2. 三种模式时主要零部件的工作状态

2. Working States of Main Components in the Three Modes

（1）关机模式：系统处于待机状态；

(1) Shutdown Mode: The system is in standby mode.

（2）制冷模式：水泵开启，风扇开启，压缩机开启；

(2) Cooling Mode: The water pump is activated, the fan is on, and the compressor is running.

（3）自循环模式：水泵开启，风扇关闭，压缩机关闭；

(3) Self-Circulation Mode: The water pump is activated, the fan is off, and the compressor is off.

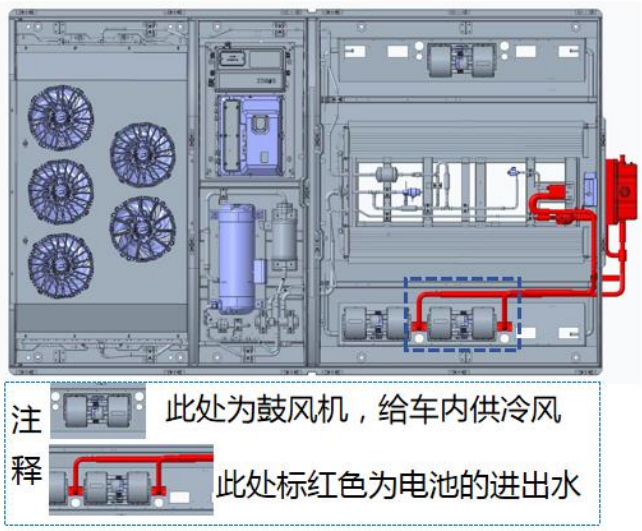

图 137 空调集成式结构示意图

Figure 138: Schematic Structure of Integrated Air Conditioning

⚠注意
TMS 系统冷却机组清理污物时禁止用高压水枪直喷；冷却机组制冷模块空气过滤器应定期清理，应避免挡风影响散热；当 TMS 系统出现故障无法自行处理时，请联系亚星售后服务人员处理。 The TMS system's cooling unit should not be cleaned with a high-pressure water gun. The air filter of the cooling module should be cleaned regularly, and care should be taken to avoid obstructions that affect heat dissipation. If the TMS system malfunctions and cannot self-diagnose, please contact the after-sales service personnel of Yaxing for assistance.

2.4.10.铅酸蓄电池

2.4.10 Lead-Acid Battery

车辆低压工作电源由铅酸蓄电池提供，为免维护类型，整车低压电源电压 DC24V。蓄电池一般安装在独立电器舱内，正极设计有手动总电源开关，经过低压电器盒给整车电器件供电。手动总电源开关可以完全断开蓄电池电极，无需拆卸线缆，蓄电池长时间不用时，应断开此开关。

The vehicle's low-voltage power supply is provided by a maintenance-free lead-acid battery with a voltage of DC 24V. The battery is typically installed in an independent electrical compartment, with a manual main power switch connected to the positive terminal. This switch supplies power to the vehicle’s electrical components via the low-voltage electrical box. The manual main power switch can fully disconnect the battery terminals without needing to remove cables. When the battery is not in use for extended periods, this switch should be turned off.

一般蓄电池电器舱布置如下图所示：

The layout of a typical battery electrical compartment is shown in the following diagram:

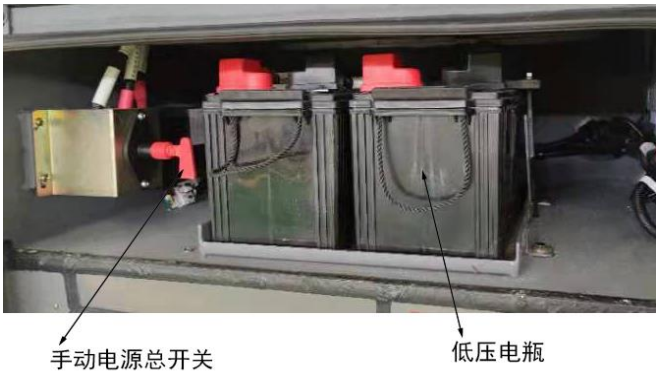

图 138 蓄电池电器舱布置示意图

Figure 139: Schematic Layout of Battery Electrical Compartment

不同车型配置免维护铅酸蓄电池型号和更换参考时间如下表：

车 型 Vehicle Model	规 格 Specification	备 注 Remarks
JS6120GHBEV	DC12V/100Ah	承保期限参见亚星保修服务管理手册。 Warranty period—see Yaxing Warranty Service Manual.
(N)： 无、1、2、3..... (N): None, 1, 2, 3...		

日常使用注意事项：

Daily Usage Notes:

1. 蓄电池要保持表面清洁干净，有污物时及时清理；

1. Keep the battery surface clean; clean any dirt promptly.

2. 蓄电池安装舱要保持清洁干净，不应有积水和杂物等；

2. Ensure the battery compartment is clean, free from standing water and debris.

3. 仪表板显示蓄电池电量不足时，要及时补电；

3. Recharge the battery promptly if the dashboard displays a low battery warning.

4. 蓄电池导线螺栓要经常检查紧固情况，保证连接良好，避免虚接；

4. Regularly check and tighten the battery cable bolts to ensure a secure connection and avoid loose contacts.

5. 蓄电池寿命到时间时及时更换，避免亏电导致车辆无法正常启动；

5. Replace the battery when it reaches the end of its service life to prevent power loss that could affect vehicle start-up.

6. 蓄电池有损伤和故障时应及时处理或更换，严禁继续使用；

6. If the battery is damaged or faulty, replace or repair it promptly; continued use is strictly prohibited.

7. 蓄电池严禁免维护类型和阀控类型混用；

7. Do not mix maintenance-free and valve-regulated battery types.

8. 蓄电池更换时应更换同型号和同品牌产品，如更换其它品牌蓄电池时应保证容量不变，同时安装尺寸要与车辆固定支架匹配，容量和固定尺寸不相符时严禁更换；

8. When replacing the battery, use the same model and brand; if switching to a different brand, ensure the capacity remains the same, and the dimensions are compatible with the vehicle’s mounting bracket. Replacement is prohibited if the capacity or dimensions do not match.

9. 蓄电池低温环境使用时，容易出现亏电问题，应做好低温保暖；

9. In low-temperature environments, the battery may experience power loss; take necessary measures to keep it warm.

10. 蓄电池长时间不用时，会自放电，应每隔两周充一次电，充电电压不应高于 DC28V，否则会影响蓄电池正常使用寿命。

10. If the battery is not used for an extended period, it may self-discharge. Charge it every two weeks, with a charging voltage not exceeding DC 28V to avoid shortening the battery's service life.

第三章 驾 驶

Chapter 3: Driving

正确的驾驶方法不但可以延长车辆寿命、提高经济效益，同时能确保行车的安全。驾驶纯电动力客车，不仅要按常规车标准进行日常检查，还需按如下步骤进行操作。

Correct driving methods not only extend vehicle life and improve economic efficiency but also ensure driving safety. When driving an electric bus, it is essential to follow regular vehicle inspection standards and also perform the following steps:

3.1.起步

3.1 Starting

3.1.1.车辆使用前准备和检查

3.1.1 Preparation and Inspection Before Using the Vehicle

1. 巡检车辆一周，确认无异常状况，后仓门关闭；

1. Inspect the vehicle by walking around it, ensuring no abnormalities, and confirming the rear compartment door is closed.

2. 确认充电枪已拔除，充电口盖板复位；

2. Confirm that the charging gun has been disconnected, and the charging port cover is in place.

3. 闭合 24V 低压铅酸电池总电源；

3. Close the 24V low-voltage lead-acid battery main power switch.

4. 将钥匙开关打到 ON 档，等待整车低压上电，确认仪表盘无报警、故障信息显示（若有故障则需排查解决），检查全车灯光工作正常；

4. Turn the ignition key to the ON position, wait for the low-voltage power system to start, and confirm no alarms or fault messages appear on the dashboard (any faults should be addressed before proceeding). Check that all vehicle lights are functioning correctly.

5. 观察仪表显示的 SOC 值，若 SOC 低于 20%请及时充电，防止电池容量不足导致车辆无法运行至目的地；

5. Observe the State of Charge (SOC) displayed on the dashboard. If SOC is below 20%, charge promptly to prevent insufficient battery capacity from hindering the vehicle from reaching its destination.

6. 观察仪表显示的气压值Ⅰ和Ⅱ，若气压值较低，则等待打气泵工作直到两侧气压值上升至 550kPa 以上；

6. Check the air pressure values displayed on the dashboard (Values I and II). If the air pressure is low, wait for the air pump to increase the pressure on both sides to over 550 kPa.

7. 将钥匙开关打到 Start 档，保持 1s 后松开，恢复到 ON 档，等待仪表显示“READY（准备就绪）”，确认仪表盘无报警、故障信息显示（若有故障则需排查解决）；

7. Turn the ignition key to the Start position, hold for 1 second, then release to return to ON. Wait until the dashboard displays “READY,” confirming no alarms or fault messages (resolve any faults if present).

3.1.2.起步操作流程

3.1.2 Starting Operation Procedures

1. 配置手动刹车阀驻车的车型起步流程：关闭乘客门→踩住刹车→换入 D（R）档位→松开手刹手柄→松开脚刹→仪表Ⓟ灯熄灭→缓踩油门起步。

1. Vehicles with a manual parking brake valve:Close passenger doors → Depress brake pedal → Shift to D (Drive) or R (Reverse) → Release parking brake handle → Release foot brake → Dashboard Ⓟ indicator turns off → Gradually press the accelerator to start.

2. 配置档位器面板“eP”按键触发电子驻车的车型起步流程：关闭乘客门→踩住刹车→换入 D（R）档位→松开手刹手柄→仪表Ⓟ灯熄灭→缓踩油门起步。

2. Vehicles with the “eP” electronic parking button on the gear panel: Close passenger doors → Depress brake pedal → Shift to D (Drive) or R (Reverse) → Release parking brake handle → Dashboard Ⓟ indicator turns off → Gradually press the accelerator to start.

3. 配置电子驻车开关触发驻车的车型起步流程：关闭乘客门→踩住刹车→换入期望档位→下推电子驻车开关→松开脚刹→仪表Ⓟ灯熄灭→缓踩油门起步。

3. Vehicles with an electronic parking switch: Close passenger doors → Depress brake pedal → Shift to desired gear → Push down the electronic parking switch → Release foot brake → Dashboard Ⓟ indicator turns off → Gradually press the accelerator to start.

4. 气压大于 0.55Mpa 时，车辆可起步，但车速应不大于 15km/h，气压大于 0.75Mpa 以上，车辆可正常行驶。

4. When air pressure exceeds 0.55 MPa, the vehicle can start, but the speed should not exceed 15 km/h. Normal driving is permitted when air pressure is above 0.75 MPa.

3.1.3.驾驶员座椅

3.1.3 Driver’s Seat

驾驶员座椅有气囊减震驾驶员座椅和机械减震驾驶员座椅等。与头枕、座椅安全带一起使用为驾驶员提供舒适、安全的乘坐功能。调整座椅前需将车辆停放在平坦的地面上。调节座椅时注意安全，座椅移动有伤及自己和周围人员的风险。

The driver's seat options include an air-cushioned suspension seat and a mechanical suspension seat. When used with the headrest and seatbelt, it provides a comfortable and safe experience for the driver. Before adjusting the seat, park the vehicle on level ground. Take care when adjusting to avoid injury to yourself or others nearby.

驾驶员座椅集成重力感应开关，当车辆处于可行驶状态时，如果驾驶员离开座椅时会向 VCU 发送信号，激活座椅开关互锁功能（详见 3.2.2），仪表同时显示报警符合和报警声；

The driver's seat includes a gravity sensor switch that, when the vehicle is in drive-ready mode, sends a signal to the Vehicle Control Unit (VCU) if the driver leaves the seat, activating the seat switch interlock function (see 3.2.2). The dashboard will display an alarm symbol and sound an alert.

驾驶员座椅安全带卡扣集成安全带开关，信号接入仪表，当未系安全带时会通过仪表显示符号片和报警，用于提醒驾驶员注意安全驾驶，任何情况下驾驶员应按照法规和安全要求规范操作，确保安全驾驶车辆。

The driver's seatbelt buckle integrates a seatbelt switch connected to the dashboard. If the seatbelt is unfastened, an icon and alert sound on the dashboard will remind the driver to ensure safe driving. The driver must always operate the vehicle in compliance with regulations and safety requirements to ensure safe driving.

1. 气囊减震驾驶员座椅

1. Air-Cushioned Suspension Driver's Seat

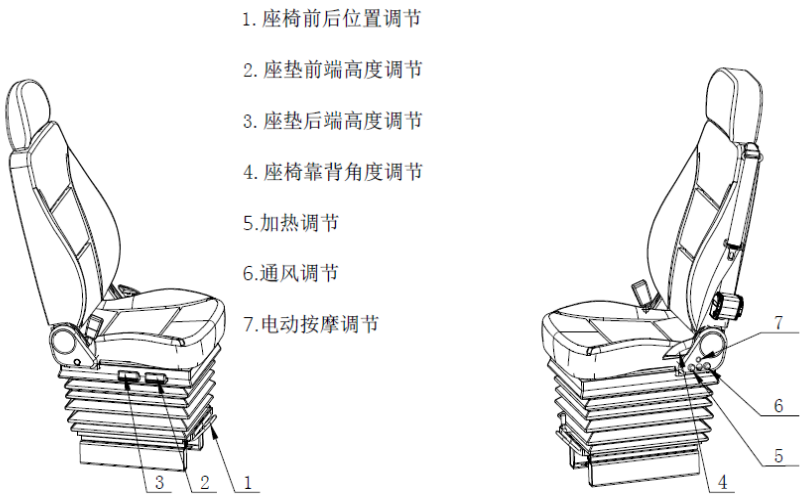

图 139 驾驶员座椅示意图

Figure 140: Driver's Seat Diagram

(1) 座椅前后位置调节

(1) Front and Rear Seat Position Adjustment

座椅前后位置调节量各为 90㎜。向上扳动拉手，向前(后)移动座椅到需要的位置。

The adjustment range for the seat's front and rear position is 90mm. Lift the handle upward and move the seat forward (or backward) to the desired position.

(2) 座垫前端高度调节

(2) Seat Cushion Front Height Adjustment

座垫前端高度调节量为 60㎜。向上搬动手柄，给座垫前端向下(向上)适当加(减)力，使座垫前端降低(升高)至需要位置，放开手柄即可。

The adjustment range for the front height of the seat cushion is 60mm. Lift the handle upward, apply appropriate pressure to move the front of the cushion down (or up) to the desired position, and release the handle.

(3) 座垫后端高度调节

(3) Seat Cushion Rear Height Adjustment

座垫后端高度调节量为 60㎜。向上搬动手柄，给座垫后端向下(向上)适当加(减)力，使座垫后端降低(升高)至需要位置，放开手柄即可。

The adjustment range for the rear height of the seat cushion is 60mm. Lift the handle upward, apply appropriate pressure to move the rear of the cushion down (or up) to the desired position, and release the handle.

(4) 座椅靠背角度调节

(4) Seat Backrest Angle Adjustment

靠背使用仰角调节量为 90°～125°

The adjustable angle range for the backrest is 90° to 125°.

向上搬动手柄，转动靠背到所需要的角度，放开手柄即可。

Lift the handle upward, rotate the backrest to the desired angle, and release the handle.

⚠注意

●1～4 调节装置的调整和回位手柄必须到位，调整机构必须处于正常啮合状态，部件锁止可靠，调整和回位手柄不到位可能造成调整失效或部件损坏。

●1–4 Ensure that the adjustment and reset handles for adjustment devices are correctly positioned. The adjustment mechanism must be securely engaged, and all components locked. Failure to properly position

⚠注意

adjustment and reset handles may result in adjustment failure or component damage.

●严禁将椅背向后倾斜时与其它部件接触，车辆运行中如损伤驾驶员座椅，可能造成部件损坏功能失效。

●Avoid contact between the seat backrest and other components when reclining. Damage to the driver's seat during vehicle operation may lead to component malfunction or failure.

●严禁驾驶员座椅靠背过度倾斜，否则行驶中发生碰撞，因身体滑到安全带下面，或被安全带紧紧勒住，可能造成人员伤亡。

●Do not excessively recline the seat backrest. In the event of a collision, excessive reclining may cause the occupant to slip beneath the seatbelt or the seatbelt to tighten excessively, leading to injury or fatality.

(5) 加热调节（选装）

(5) Heating Adjustment (Optional)

逆时针旋转旋钮，旋钮上小红灯亮，为加热垫开启状态，逆时针旋转档位逐渐增大，旋转到无法旋转时为最大档位，顺时针旋转到小红灯灭即为加热垫闭状态；

Rotate the knob counterclockwise until the small red light on the knob lights up, indicating that the heating pad is on. The counterclockwise rotation gradually increases the heating level; the maximum level is reached when rotation stops. Turn the knob clockwise until the red light goes off to turn off the heating pad.

⚠注意

●患有末梢神经疾病，或疼痛感知能力受限的人士、皮肤敏感者，严禁长时间使用座椅加热，否则可能造成烫伤。

●People with peripheral neuropathy, reduced pain sensitivity, or sensitive skin should avoid prolonged use of seat heating, as it may cause burns.

●使用座椅加热时，座椅上严禁覆盖毯子或座垫，否则可能造成灼伤。

●Avoid covering the seat with blankets or cushions when using seat heating, as this may cause burns.

●动力系统关闭时，严禁使用座椅加热功能，可能造成蓄电池电量耗尽。

●Avoid using the seat heating function when the power system is off, as it may drain the battery.

(6) 通风调节（选装）

(6) Ventilation Adjustment (Optional)

逆时针旋转旋钮，旋钮上小红灯亮，为风扇开启状态，逆时针旋转档位逐渐增大，旋转到无法旋转时为最大档位，顺时针旋转到小红灯灭即为风扇关闭状态；

Rotate the knob counterclockwise until the small red light on the knob lights up, indicating that the fan is on. The counterclockwise rotation gradually increases the fan speed; the maximum level is reached when rotation stops. Turn the knob clockwise until the red light goes off to turn off the fan.

(7) 电动按摩调节（选装）

(7) Electric Massage Adjustment (Optional)

按一下按钮，按摩器开始工作，再按一下按钮，按摩器停止工作。

Press the button once to start the massager. Press the button again to stop it.



图 140　驾驶员座椅及功能键介绍

Figure 141: Driver's Seat and Function Key Introduction

驾驶员座椅为气囊减震驾驶员座椅。与头枕、座椅安全带一起使用为驾驶员提供舒适、安全的乘坐功能。调整座椅前需将车辆停放在平坦的地面上。调节座椅时注意安全，座椅移动有伤及自己和周围人员的风险。

The driver's seat is an air-cushion shock-absorbing seat. Together with the headrest and seatbelt, it provides the driver with a comfortable and safe seating experience. The vehicle should be parked on a flat surface before adjusting the seat. Exercise caution when adjusting the seat, as movement poses a risk of injury to oneself and nearby individuals.

驾驶员座椅安全带卡扣集成安全带开关，信号接入仪表，当未系安全带时会通过仪表显示符号片和报警，用于提醒驾驶员注意安全驾驶，任何情况下驾驶员应按照法规和安全要求规范操作，确保安全驾驶车辆。

The seatbelt buckle on the driver’s seat includes an integrated seatbelt switch connected to the instrument panel. When the seatbelt is not fastened, a symbol and an alarm on the panel serve as a reminder

for safe driving. The driver must always operate the vehicle in compliance with legal and safety standards to ensure safe driving.

座椅功能及操作

Seat Functions and Operations



图 141 高度调节示意图

Figure 142: Height Adjustment Diagram

1. 高度调节

1. Height Adjustment

8 档高度调节。

8-position height adjustment.

拉动或推动手柄进行高度调节，使座椅向上或向下移动一档。再次向上或向下调节高度至下一步之前，手柄必须松开。

Pull or push the handle to adjust the height, moving the seat up or down by one level. Release the handle before making further adjustments to the height.



图 142 中部腰托调节示意图

Figure 143: Central Lumbar Support Adjustment Diagram

2. 中部腰托调节

2. Central Lumbar Support Adjustment

通过前方(1)和后方(2)开关，可以单独调节座椅靠背上部和下部区域的弯曲度。

The upper and lower regions of the seat backrest can be adjusted individually via the front (1) and rear (2) switches.

按“+”充气，按“-”放气。

Press “+” to inflate, press “-” to deflate.



图 143 两侧腰托调节示意图

Figure 144: Side Lumbar Support Adjustment Diagram

3. 两侧腰托调节

3. Side Lumbar Support Adjustment

通过操作开关，靠背的两侧腰托的弯曲度可以单独调节。

The curvature of the lumbar supports on both sides of the backrest can be adjusted individually via the switch.

按“+”充气，按“-”放气。

Press “+” to inflate, press “-” to deflate.

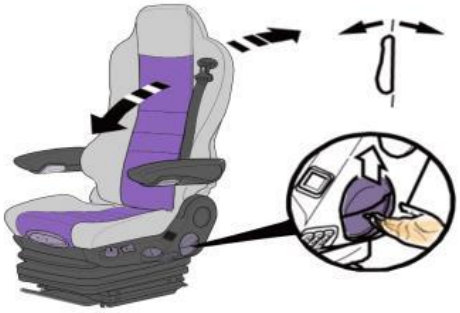

图 144 靠背角度调节示意图

Figure 145: Backrest Angle Adjustment Diagram

4. 靠背角度调节

4. Backrest Angle Adjustment

向上拉手柄靠背解锁，对靠背施压，使其调整到理想的位置后松开手柄。被锁止后，靠背不能动。

Lift the handle to unlock the backrest, adjust it to the desired position, then release the handle. Once locked, the backrest remains in place.

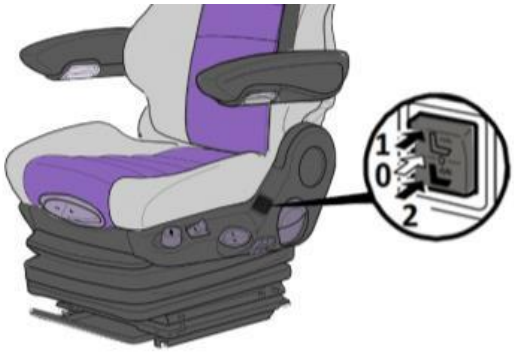

图 145 座椅加热或通风示意图

Figure 146: Seat Heating or Ventilation Diagram

5. 座椅加热或通风

5. Seat Heating or Ventilation

通过操作座椅加热或通风开关，靠背和坐垫中的加热垫或风扇开始工作，工作档位为 2 档。

The seat heating or ventilation function can be activated by operating the switch. The heating pad or fan in the backrest and seat cushion will work at two levels.

0=加热或通风 关

0 = Heating or Ventilation Off

1=加热或通风 开 (低档)

1 = Heating or Ventilation On (Low Level)

2=加热或通风 开 (高档)

2 = Heating or Ventilation On (High Level)

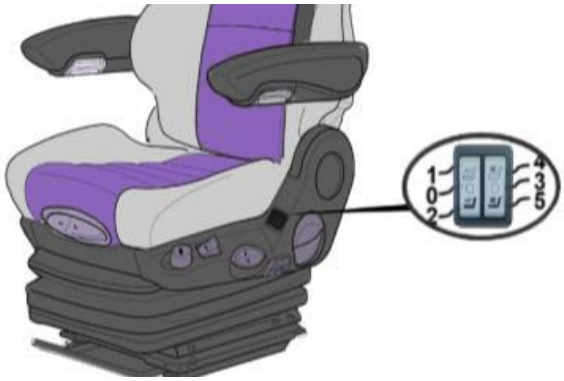

图 146 座椅通风加热调节示意图

Figure 147: Seat Ventilation and Heating Adjustment Diagram

6. 座椅通风加热

6. Seat Ventilation and Heating

通过操作座椅通风和加热开关，可以控制座椅的通风或加热功能

The seat ventilation and heating functions can be controlled via the switch.

0=加热 关

0 = Heating Off

1=加热 开(低档)

1 = Heating On (Low Level)

2=加热 开(高档)

2 = Heating On (High Level)

3=通风 关

3 = Ventilation Off

4=通风 开(低档)

4 = Ventilation On (Low Level)

5=通风 开(高档)

5 = Ventilation On (High Level)



图 147 可折叠扶手示意图

Figure 148: Foldable Armrest Diagram

7. 可折叠扶手

7. Foldable Armrest

如有需要，扶手可以折叠

The armrest can be folded as needed.



图 148 扶手角度调节示意图

Figure 149: Armrest Angle Adjustment Diagram

8. 扶手角度调节

8. Armrest Angle Adjustment

通过旋转滚轮可以调节扶手倾斜程度，旋转滚轮(+)扶手前端会升起，旋转滚轮(-)扶手前端会降低。

The angle of the armrest can be adjusted by rotating the roller. Rotating the roller (+) raises the front end of the armrest, while rotating it (-) lowers the front end.

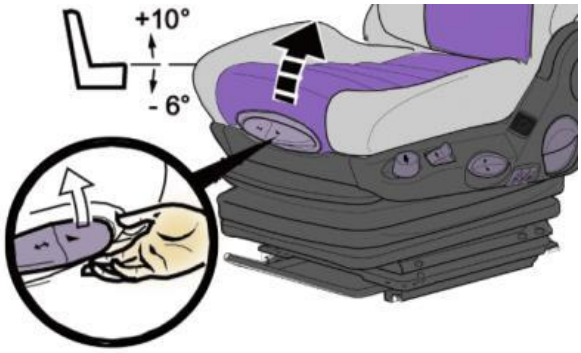

图 149 座椅倾角调节示意图

Figure 150: Seat Tilt Adjustment Diagram

9. 座椅倾角调节

9. Seat Tilt Adjustment

拉动手柄,在座垫前端加压或抬起,调整座垫的倾斜角度到所需位置。

Pull the handle and apply pressure to or lift the front of the seat cushion to adjust the seat tilt angle to the desired position.

倾角范围 －6° ～ +10°

Tilt range: -6° to +10°

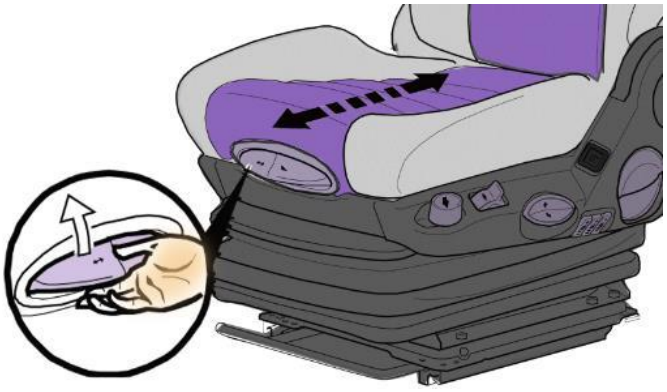

图 150 座椅深度调节示意图

Figure 151: Seat Depth Adjustment Diagram

10. 座垫深度调节

10. Seat Depth Adjustment

拉动手柄向前向后移动座垫到所需位置，放开手柄并锁止座垫，以达到座深调节作用。

Pull the handle and move the seat cushion forward or backward to the desired position. Release the handle and lock the seat cushion to adjust the seat depth.

座深调节范围：6*10=60mm

Seat depth adjustment range: 6 x 10 = 60mm

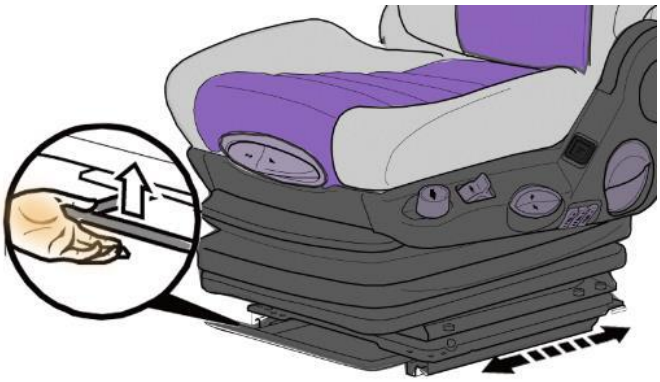

图 151 座椅前后调节示意图

Figure 152: Front and Rear Seat Adjustment Diagram

11. 座椅前后调节

11. Front and Rear Seat Adjustment

完全向上抬起手柄，向前或向后调整座椅，放开手柄并使座椅锁止。

Lift the handle fully, adjust the seat forward or backward, release the handle, and lock the seat in place.

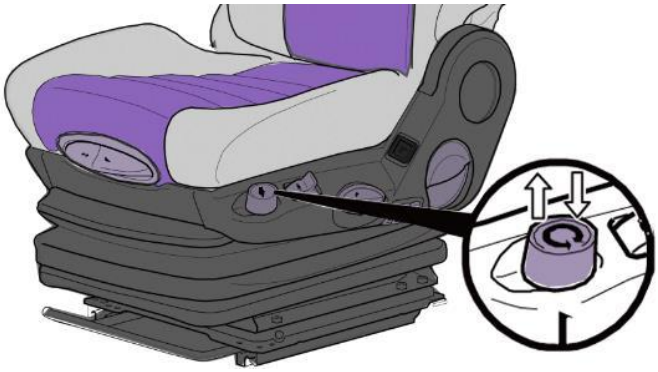

图 152 座椅旋转（选装）示意图

Figure 153: Seat Rotation (Optional) Diagram

12. 座椅旋转-选装

12. Seat Rotation - Optional

按下按钮同时旋转座椅，座椅可以左右旋转旋转过程中按钮可以释放。座椅在驾驶位置自动锁止。

Press the button and rotate the seat simultaneously. The seat can rotate left and right. During rotation, the button can be released. The seat will automatically lock in the driving position.

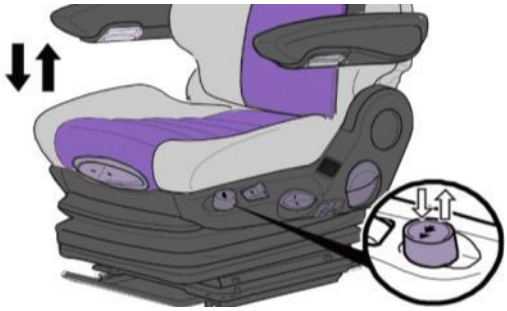

图 153 快降示意图

Figure 154: Quick Drop Diagram

13. 快降

13. Quick Drop

按下按钮不动，座椅可以降到最低位置。再次按按钮并释放，座椅回到驾驶位置。

Press and hold the button to lower the seat to the lowest position. Press the button again and release to return the seat to the driving position.

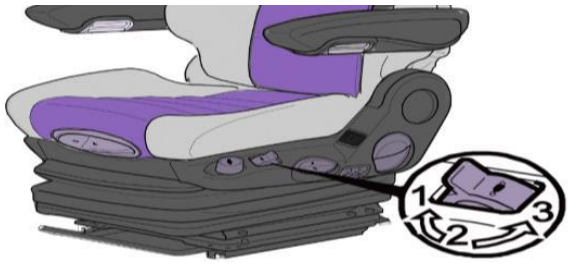

图 154 阻尼可调示意图

Figure 155: Adjustable Damping Diagram

14. 阻尼可调

14. Adjustable Damping

调整减振器阻尼,可以使座椅在乘坐不同人和行驶不同路面时的悬浮性能更舒适。

The shock absorber damping can be adjusted to enhance seat suspension performance, providing comfort for different occupants and road conditions.

1 =硬

1 = Hard

2 =中

2 = Medium

3 =软

3 = Soft

2. 机械减震驾驶员座椅

2. Mechanical Shock-Absorbing Driver's Seat

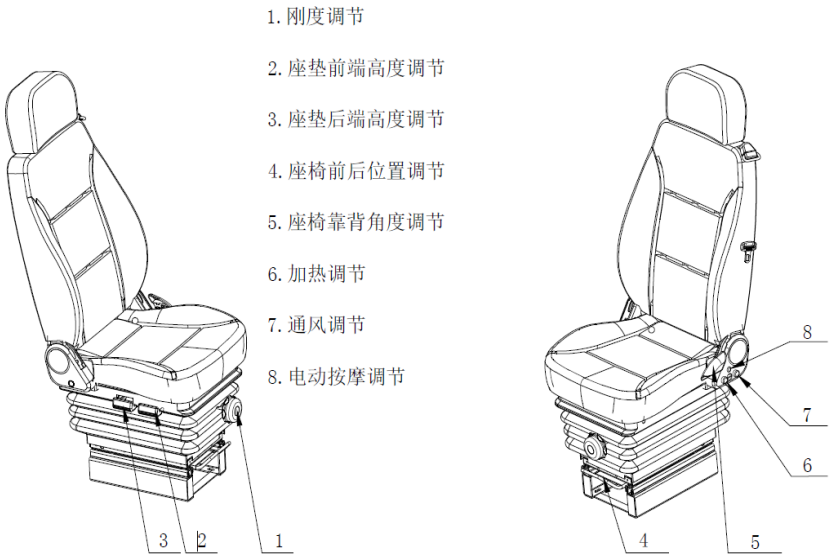

图 155 驾驶员座椅示意图

Figure 156: Driver's Seat Diagram

（1）刚度调节

(1) Stiffness Adjustment

驾驶员可视具体路况和自身的体重，顺时针(逆时针)旋转手轮，将预置力调大(调小)，直至感到舒适为止。

The driver can adjust the preset force according to specific road conditions and body weight by rotating the handwheel clockwise (to increase) or counterclockwise (to decrease) until a comfortable setting is achieved.

（2）调节装置使用方法与气囊减震驾驶员座椅相同，相关注意事项相同。

(2) The adjustment method is the same as that for the air-cushion shock-absorbing driver's seat, with the same precautions applicable.

3. 高靠背气囊司机椅

3. High-Back Air-Cushion Driver's Seat

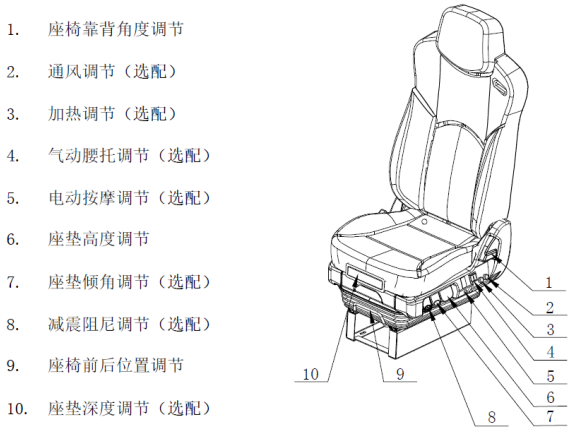

图 156 驾驶员座椅示意图

3. High-Back Air-Cushion Driver's Seat

（1）靠背角度调节

(1) Backrest Angle Adjustment

靠背使用仰角调节量为90°～135°。向上搬动手柄，转动靠背到所需要的角度，放开手柄即可。

The backrest angle can be adjusted from 90° to 135°. Lift the handle and adjust the backrest to the desired angle, then release the handle to lock it in place.

（2）调节1

(2) Adjustment 1

逆时针旋转旋钮，旋钮上小红灯亮，为风扇开启状态，逆时针旋转档位逐渐增大，旋转到无法旋转时为最大档位，顺时针旋转到小红灯灭即为风扇关闭状态。

Rotate the knob counterclockwise to activate the fan (indicated by the red light on the knob). As you continue to turn the knob counterclockwise, the fan speed will gradually increase, with the maximum setting reached when the knob can no longer rotate. Turning the knob clockwise until the red light goes off will turn off the fan.

（3） 调节2

(3) Adjustment 2

逆时针旋转旋钮，旋钮上小红灯亮，为加热垫开启状态，逆时针旋转档位逐渐增大，旋转到无法旋转时为最大档位，顺时针旋转到小红灯灭即为加热垫关闭状态。

Rotate the knob counterclockwise to activate the heating pad (indicated by the red light on the knob). Continue to turn counterclockwise to increase the heat level, with the maximum setting reached when the knob cannot rotate further. Turning the knob clockwise until the red light goes off will turn off the heating pad.

⚠注意

●患有末梢神经疾病，或疼痛感知能力受限的人士、皮肤敏感者，严禁长时间使用座椅加热，否则可能造成烫伤。

Individuals with peripheral neuropathy, reduced pain perception, or sensitive skin should avoid prolonged use of the seat heating, as this may cause burns.

●使用座椅加热时，座椅上严禁覆盖毯子或座垫，否则可能造成灼伤。

●When using seat heating, do not cover the seat with blankets or cushions, as this may cause burns.

●动力系统关闭时，严禁使用座椅加热功能，可能造成蓄电池电量耗尽。

Do not use the seat heating function when the power system is off, as this could drain the battery.

（4） 电动腰托调节

(4) Electric Lumbar Support Adjustment

左边按钮为下气袋调节：按住左按钮上端，下气袋充气，按住左按钮下端，下气袋放气；

The left button controls the lower lumbar airbag: press the top of the left button to inflate the lower airbag; press the bottom to deflate it.

右边按钮为下气袋调节：按住右按钮上端，上气袋充气，按住右按钮下端，上气袋放气；

The right button controls the upper lumbar airbag: press the top of the right button to inflate the upper airbag; press the bottom to deflate it.

（5） 电动按摩调节

(5) Electric Massage Adjustment

按一下按钮，按摩器开始工作，再按一下按钮，按摩器停止工作。

Press the button once to start the massage function. Press it again to stop the massage.

（6）座垫高度调节

(6) Seat Cushion Height Adjustment

座垫高度调节量为90㎜。向上搬动手柄，使座垫升高至需要位置，放开手柄即可；向下搬动手柄，使座垫降低（升高）至需要位置，放开手柄即可。

The seat cushion height adjustment range is 90mm. Lift the handle to raise the cushion to the desired height, then release the handle. Lower the handle to adjust the seat to the required position and release it to lock.

（7）座垫倾角调节

(7) Seat Cushion Tilt Adjustment

向上搬动手柄,此时座垫处于解锁状态，调节座垫角度至合适自己的角度，放开手柄即可。

Lift the handle to unlock the cushion angle. Adjust the cushion angle to a comfortable position, then release the handle to lock it.

（8）减震阻尼调节

(8) Shock Absorption Damping Adjustment

向上搬动手柄，此时减震阻尼力值加大，适用于较颠簸的路面；向下搬动手柄，此时减震阻尼力值减小，适用于较平坦的路面

Lift the handle to increase the damping value, which is suitable for rough roads. Lower the handle to reduce the damping, making it ideal for smoother roads.

（9）座椅前后位置调节

(9) Front and Rear Seat Position Adjustment

座椅向前的调节量为180㎜，向后调节量90㎜。向上扳动拉手，向前（后）移动座椅到需要的位置。

The forward adjustment range is 180mm, and the backward adjustment range is 90mm. Lift the handle and move the seat forward or backward to the desired position.

（10）座垫深度调节

(10) Seat Cushion Depth Adjustment

向上搬动手柄,此时座垫处于解锁状态，滑动座垫至合适的位置，放开手柄，在听到咔的一声，座垫又处于锁住的状态，调节完毕。

Lift the handle to unlock the seat cushion. Slide the cushion to the desired position, then release the handle. When you hear a "click," the cushion is locked in place, and the adjustment is complete.

⚠注意

●所有调节装置的调整和回位手柄必须到位，调整机构必须处于正常啮合状态，部件锁止可靠，调整和回位手柄不到位可能造成调整失效或部件损坏。

●Ensure all adjustment and reset handles are fully in place; the adjustment mechanism must be in proper engagement, and components securely locked. Incomplete adjustment or return of handles may result in adjustment failure or component damage.

●严禁将椅背向后倾斜时与其它部件接触，车辆运行中如损伤驾驶员座椅，可能造成部件损坏功能失效。

●Avoid contact between the backrest and other components when reclining, as damage to the driver's seat during operation could lead to component failure.

●严禁驾驶员座椅靠背过度倾斜，否则行驶中发生碰撞，因身体滑到安全带下面，或被安全带紧紧勒住，可能造成人员伤亡。

●Do not excessively recline the driver's seat backrest. In the event of a collision, the driver may slip under or be tightly restrained by the seatbelt, posing a risk of injury or fatality.

3.1.4.乘客座椅

3.1.4 Passenger Seats

乘客座椅为乘坐人员提供舒适、安全的乘坐功能，座椅材质可分为硬面座椅和软面座椅，具体视实车配置而定。

The passenger seats provide comfortable and safe seating for passengers, with seat materials available in hard and soft surfaces, depending on vehicle configuration.



图 157 乘客座椅示意图



图 158 乘客座椅示意图

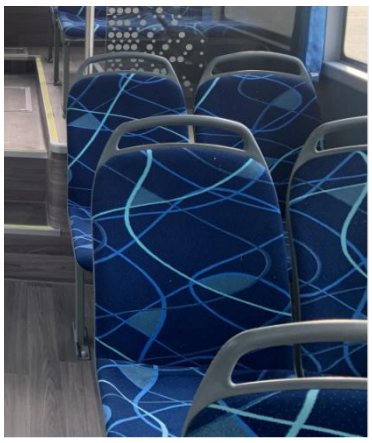

图 159 乘客座椅示意图

Figure 158: Passenger Seat Diagram Figure 159: Passenger Seat Diagram Figure 160: Passenger Seat Diagram

警告

●站立乘客应扶紧附近乘客座椅靠背和车厢内扶手、立柱，避免行车中乘客因未抓紧扶好，造成伤害。

●Standing passengers should hold onto the nearby seat backrests, handrails, or poles inside the vehicle to avoid injury from losing balance while the vehicle is moving.

●严禁斜躺在乘客座椅上，避免在发生制动时乘客从座椅滑落，造成严重伤害。

●Passengers should not recline on the seats to prevent slipping off during sudden braking, which could cause serious injury.

●严禁将手伸入乘客座椅的间隙内，避免手卡入乘客座椅间隙，造成人员受伤。

●Do not place hands between seat gaps to avoid hand injuries.

●乘客座椅出现异响、旷动时应及时检修，避免车辆运行过程中乘客座椅功能失效，造成人员伤亡，

●If the passenger seats produce unusual noises or exhibit excessive play, they should be inspected and repaired promptly to prevent potential malfunctions that may cause harm while the vehicle is in motion.

●禁止在乘客座椅上加装座椅套(包含但不限于竹编、皮毛类)，发生事故时座椅套降低人体与座椅间的摩擦力，造成人员伤亡。

●Adding seat covers (such as bamboo or fur covers) to passenger seats is prohibited, as they may reduce the friction between the passenger and seat in an accident, increasing the risk of injury.

3.1.5.方向盘调整

3.1.5 Steering Wheel Adjustment

驾驶员可以根据自己的身材、使用习惯，自由地调节司机椅的上下位置、靠背角度，也可以调节方向盘的上下、前后位置及倾角。

The driver can adjust the seat height, backrest angle, and the steering wheel's up-down, fore-aft position, and tilt to suit their stature and preferences.

1. 将驻车制动手柄拉至驻车状态。

1. Engage the parking brake.

2. 松开转向管柱调节手柄，可以调整方向盘前后、上下以及倾角。

2. Release the steering column adjustment handle to adjust the steering wheel’s forward/backward, up/down, and tilt positions.

3. 调整至理想位置，不遮挡组合仪表，双手可以舒适、自如的控制方向盘。

3. Adjust to the ideal position where the instrument panel is not obscured, and both hands can comfortably control the steering wheel.

4. 方向盘调节好以后，拉紧转向管柱调节手柄，确保牢固锁定。

4. After adjustment, lock the steering column adjustment handle securely.





图 160 驾驶区调整示意图　　图 161 方向盘调节示意图

Figure 161: Driver's Seat Adjustment Diagram　　**Figure 162: Steering Wheel Adjustment Diagram**

警告

●行车前一定要将方向盘调整手柄锁紧。

●Always lock the steering wheel adjustment handle before driving.

●行驶过程中切勿调节方向盘，否则会导致行车失控，造成人身伤亡或车辆损坏。

●Do not adjust the steering wheel while driving, as this may cause loss of vehicle control, leading to injury or damage.

●方向盘调节后，需保证双手可以舒适、自如的操控方向盘，否则会造成驾驶员双臂疲劳，可能会无法及时转向到位，造成碰撞事故及人员伤亡。

●After adjustment, ensure both hands can comfortably control the steering wheel to prevent arm fatigue, which could impair timely steering and result in collisions or injuries.

3.2.行驶

3.2 Driving

3.2.1.雪地模式功能

3.2.1 Snow Mode Function

1. 功能：车辆在雨雪或结冰等湿滑路面行驶时，需打开“雨雪模式”翘板开关，仪表显示“雨雪模式”指示灯。雨雪模式开启将关闭驱动电机制动能量回收功能，以免车辆出现车轮打滑、甩尾等。

1.Function: When driving on slippery surfaces, such as in rain or snow, activate the "Rain/Snow Mode" switch. The instrument panel will display the " " indicator light. When activated, this mode disables the regenerative braking function of the drive motor to prevent wheel slippage or fishtailing.

2. 解除：关闭“雨雪模式”使能开关，即可解除。

2. Deactivation: Turn off the "Rain/Snow Mode" switch to deactivate.



图 162 雨雪模式开关示意图

Figure 163: Snow Mode Switch Diagram

警告

●车辆进入雨雪模式行驶时，请减速慢行，禁止猛踩油门加速。

●When driving in snow mode, reduce speed and avoid sudden acceleration.

●车辆进入雨雪模式制动时，请缓慢制动减速，非紧急情况下禁止猛踩制动。

●When braking in snow mode, apply brakes gradually and avoid sudden braking except in emergencies.

注意

该功能为选装，是否配置此功能，具体详见车辆配置。

This function is optional and may not be included in all configurations.

3.2.2.驾驶座椅互锁

3.2.2 Driver Seat Interlock

1. **功能：**当车辆处于准备就绪状态“READY”，驾驶员离开司机椅时，激活“驾驶座椅互锁功能”。此时车辆油门信号无效，仪表蜂鸣报警，并显示“驾驶员离位”提醒。安装电子手刹车辆会自动激活驻车功能（无论之前是否激活驻车），仪表显示“eP”和 “Ⓟ”指示灯，档位器会自动切换到空档 N 档。

1. **Function**: When the vehicle is in "READY" mode, if the driver leaves the seat, the "Driver Seat Interlock Function" activates. The accelerator signal is disabled, an alarm sounds, and the instrument panel displays "". In vehicles equipped with an electronic parking brake, the parking function will activate automatically (regardless of previous status), and the instrument panel will display the "eP" and "Ⓟ " indicators, with the gear selector switching to Neutral (N).

2. **解除：**驾驶员坐回司机座椅，踩刹车即可解除，同时仪表中亮起的指示灯和报警也将解除。需要行车时，按正常起步流程操作即可；特殊情况下，可通过打开双闪灯屏蔽限制，但报警会保持，应注意安全驾驶。

2. **Deactivation**: The interlock releases when the driver returns to the seat and presses the brake pedal. The indicator lights and alarm will turn off. Follow normal startup procedures to resume driving. In special circumstances, activate the hazard lights to override the restriction, although the alarm will continue. Drive cautiously.

3.2.3.ASR 互锁功能

3.2.3 ASR Interlock Function

1. **功能：**车辆行驶过程中检测到 ASR 功能激活时，ASR 指示灯闪烁状态，驱动电机输出转矩清零，仪表报警显示“电机功率受限”进行提醒。

1. **Function**: If ASR (Anti-Slip Regulation) activates while driving, the ASR indicator light will flash, and the drive motor output torque will reduce to zero. The instrument panel will display an alert stating "Motor Power Restricted" as a warning.

2. **解除：** ASR 功能退出时自动解除互锁或驾驶员手动关闭 ASR 开关时（ASR 功能也屏蔽）。

2. **Deactivation**: The interlock automatically releases when ASR deactivates or when the driver manually turns off the ASR switch (also disabling the ASR function).

⚠警告
●配置 ASR 功能车辆，行驶中严禁关闭 ASR 使能开关，以免引起安全事故。
●Vehicles with ASR should not disable the ASR switch while driving, as this may compromise safety.
●特殊情况下需要关闭 ASR 时，严禁高速行驶，注意安全驾驶。
●In special cases when ASR must be turned off, do not drive at high speeds, and drive cautiously.

3.2.4.车门互锁

3.2.4 Door Interlock

1. **功能**：当车辆处于准备就绪状态“READY”时，乘客门或驱动电机仓门未完全关闭状态下，将激活车门互锁功能。此时油门信号无效，无法加速行车，仪表显示“乘客门开启，行车请关闭”或“驱动电机仓门开启，行车请关闭”；当车辆选用 EBS 时，任一乘客门打开将激活自动驻车，仪表显示“”指示灯。关闭乘客门，重新踩油门时解除。

1. **Function**: When the vehicle is in "READY" mode, the "Door Interlock Function" activates if the passenger door or drive motor compartment door is not fully closed. The accelerator signal is disabled, preventing the vehicle from accelerating. The instrument panel will display "Passenger Door Open, Please Close Before Driving" or "Drive Motor Compartment Door Open, Please Close Before Driving." In vehicles with EBS (Electronic Braking System), opening any passenger door will activate automatic parking, with the "" indicator illuminated on the instrument panel. Closing the door and pressing the accelerator will release the interlock.

2. **解除**：正常情况下，完全关闭乘客门或发动起仓门解除；特殊情况下，打开双闪灯解除，但报警会保持。

2. **Deactivation**: The interlock releases when the passenger or compartment door is fully closed. In special circumstances, activating the hazard lights will temporarily override the restriction, although the alarm will persist.



●驻车制动有效或关闭点火开关，车门互锁功能自动解除。

●The door interlock function automatically deactivates when the parking brake is engaged or the ignition is off.

●打开双闪灯可临时屏蔽限制，仅限紧急情况下使用，注意安全驾驶。

●The hazard lights can be used to temporarily override restrictions but only in emergencies, and safe driving practices should be followed.

●安装 EBS 车辆通过车门互锁功能驻车时，驾驶员不可离开座椅，也不可作为停车制动使用，长时间停车时应拉手刹。

●In vehicles with EBS, drivers should not leave their seats while using the door interlock for parking and should not rely on it as a parking brake. For extended parking, engage the handbrake.

3.2.5.制动能量回收

3.2.5 Regenerative Braking

车辆正常行驶中通过制动踏板减速时，会激活制动能量回收功能，驱动电机会处于发电和电磁辅助制动状态。发电量和电磁辅助制动能力会随车速和制动踏板踩下深度而不同，车速越高，踏板踩下深度越大，发电量和电磁辅助制动能力越强。

During normal vehicle operation, when slowing down with the brake pedal, the regenerative braking function activates, and the drive motor switches to generating and electromagnetic auxiliary braking mode. The amount of energy generated and the capacity for electromagnetic braking vary with vehicle speed and the depth of brake pedal application: the higher the speed and the deeper the pedal is pressed, the greater the energy generation and braking capacity.

在车辆不需要紧急制动时，如需要减速可以轻踩制动踏板，尽量通过电磁辅助制动减速。当需要停车或紧急制动时，正常踩制动踏板即可。

When emergency braking is not required, gently press the brake pedal to decelerate, maximizing the use of electromagnetic braking. For stopping or in an emergency, simply press the brake pedal as usual.

当动力电池故障或电量满电时，此功能会限制或禁止使用，请注意安全行车，随时注意刹车状态。

This function may be limited or disabled in the event of a battery fault or when the battery is fully charged, so always prioritize safe driving and monitor brake conditions.

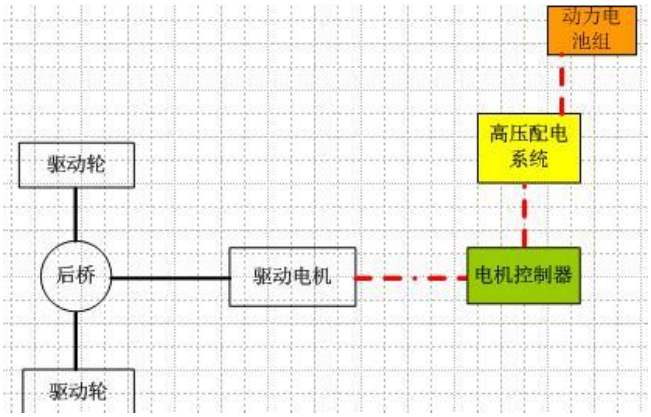

图 163 辅助制动示意图

Figure 164: Auxiliary Braking Diagram

制动能量回收驱动电机反向再生制动，给动力电池充电。

The regenerative braking of the drive motor recharges the power battery.

3.2.6.低速提示音功能

3.2.6 Low-Speed Warning Sound Function

电动车辆按照法规必须安装低速提示音系统（AVAS），该系统由控制模块和喇叭组成。当车辆运行速度低于 20km/h 时，该系统会发出提示声音（声音形式视实车配置），用于提醒行人注意车辆安全 AVAS 喇叭。当车速大于 20km/h 时，系统会自动关闭提示音。

Electric vehicles are required by regulations to have a low-speed warning sound system (AVAS), consisting of a control module and a speaker. When the vehicle speed is below 20 km/h, the system emits a warning sound (the type of sound varies depending on the vehicle configuration) to alert pedestrians of the vehicle's presence. The warning sound automatically turns off when the speed exceeds 20 km/h.



图 164 低速提示音系统示意图

Figure 165: Low-Speed Warning Sound System Diagram

3.3.停车

3.3 Parking

1. 踩住脚刹→选择空档 N→拉上手刹→松开脚刹。确认仪表盘和操作面板无报警、故障信息显示（若有则查询解决故障）。

1. Press the foot brake → Select Neutral (N) → Pull up the handbrake → Release the foot brake. Ensure there are no warning or fault indicators on the dashboard and control panel (if there are, investigate and resolve the issues).

2. 将钥匙开关拨回到 OFF 档，拔出带走钥匙。

2. Turn the key switch back to the OFF position and remove the key.

3. 关闭仪表台总电源翘板开关，巡检车辆一周，确认各电气设备已关闭，无异常状况。

3. Switch off the main power supply switch on the dashboard, inspect the vehicle all around, and confirm that all electrical devices are off and that there are no abnormal conditions.

4. 关闭窗户、车门等，然后断开低压电源总开关（即手闸开关）。

4. Close the windows, doors, etc., and then disconnect the low-voltage power supply main switch (the handbrake switch).

警告

●严禁车辆带故障运行，有安全风险。

Vehicles with faults must not be operated due to safety risks.

●坡道停车时必须拉手刹或深踩制动踏板，以免有溜车危险。

●When parking on an incline, always engage the handbrake or apply the brake pedal firmly to prevent rolling back.

●带电子驻车功能车辆坡道驻车时，严禁驾驶员离开座椅。

●In vehicles equipped with electronic parking functions, the driver must not leave the seat when parking on an incline.

●车辆停车不能停在较大的坡道上。

●Vehicles should not be parked on steep slopes.

●车辆停于坡道上时应在车轮的下坡方向垫上三角块以防止溜车。

●When parked on an incline, place wheel chocks on the downhill side to prevent rolling.

3.4.节能

3.4 Energy Saving

起步操作要合理：起步时，低档起步，能够提供充足的动力，起步时应平稳、柔和、避免大油门。

Starting operations should be reasonable: begin with a low gear to provide sufficient power, ensuring a smooth and gentle start while avoiding excessive acceleration.

1. **匀速行驶**：变速行驶时因为重复加速和减速的操作行驶，耗电量将明显提高，所以要保持匀速。

1. **Maintain Steady Speed**: Frequent acceleration and deceleration increase energy consumption, so aim for a constant speed.

2. **控制最高车速**：客车超过经济时速后，速度越快电量消耗越多，即使在天气、路况都十分理想的情况下，也要特别控制最高车速。

2. **Control Maximum Speed**: In passenger vehicles, exceeding the economical speed increases energy consumption, even in ideal weather and road conditions, so control the maximum speed carefully.

3. **尽量采用滑行减速**：在车辆减速过程中，尽量采用滑行方式减速，以利于电能的回收。

3. **Use Coasting to Slow Down**: Whenever possible, slow down by coasting to facilitate energy recovery.

4. **常规条件下的非紧急制动**：只需松开油门，轻踩制动踏板即可，以利于电机产生缓速制动功能（注意：不能像传统车气刹的点刹一踩一松）。

4. Non-Emergency Braking Under Normal Conditions: Simply release the accelerator and gently press the brake pedal to allow the motor to produce regenerative braking (note: do not use the traditional point-and-release method common with pneumatic brakes).

5. **紧急制动：**紧急情况下情况下，驾驶员必须与常规车一样迅速踩下制动踏板，以保证行人和车辆的安全。

5. Emergency Braking: In emergencies, the driver must promptly press the brake pedal as they would in a conventional vehicle to ensure safety for pedestrians and other vehicles.

6. **控制胎压：**轮胎气压较正常低 20%就会增加电量消耗约 8%；当气压高时消耗量变低，但轮胎寿命却变短，附着力降低，故要正常选择轮胎和胎压。

6. Control Tire Pressure: A tire pressure that is 20% below normal can increase energy consumption by about 8%. Higher pressure may reduce energy consumption but can decrease tire lifespan and traction, so choose tires and pressure levels wisely.

3.5.拖车

3.5 Towing

1. **若车辆故障需要使用拖车拖回修理场时需要注意：**

1. If the vehicle requires towing to a repair facility due to a fault, please note the following:

(1)确保关闭车辆低压电源总开关，关闭整车高压电源。

(1) Ensure that the low-voltage power supply main switch is turned off and that the high-voltage power supply for the entire vehicle is disabled.

(2)解除驻车制动、电子手刹等功能，本车气源有问题时需外接气源。

(2) Release the parking brake and electronic handbrake functions. If there are issues with the vehicle's air supply, an external air source may be needed.

(3)当外接气源后依然无法解除制动时，需手动解除制动气室螺栓，并确定彻底解除驻车制动。

(3) If the external air supply still does not release the brake, manually remove the brake chamber bolts to ensure the parking brake is fully disengaged.

(4)拖车速度不超过 20km/h 情况下，连续拖车距离要求不大于 10km（否则有电机发热风险），拖车时要缓慢起步，确保行车安全。

(4) When towing, do not exceed a speed of 20 km/h, and the total towing distance should not exceed 10 km (to prevent motor overheating). Start slowly when towing to ensure safe operation.

(5)当拖车距离大于 10km 时，拖车速度不超过 30km/h，要求断开驱动电机与后桥之间连接（当采用专用托盘车整车托运时可不断开机械连接）。

(5) For towing distances greater than 10 km, the speed must not exceed 30 km/h, and the connection between the drive motor and rear axle must be disconnected (this does not apply if using a dedicated trailer for transport).

(6)车辆牵引时，牵引车与被牵引车需开启应急双闪灯。

(6) When towing, both the towing vehicle and the towed vehicle must activate hazard lights.

(7)牵引方式推荐使用硬式牵引杆或专用拖板车，特殊情况下采用软钢丝绳拖车绳，必须保证故障车制动系统能正常工作，并注意拖车安全。

(7) Recommended towing methods include a rigid tow bar or a dedicated tow truck; in special cases, a soft steel cable may be used, but ensure that the braking system of the faulty vehicle is functioning properly and prioritize towing safety.

2. 拖车钩使用方法

2. Using the Tow Hook

(1)拖车时拔出弹簧销，取出销轴，将牵引杆或牵引绳安装到位后插入销轴，插入弹簧销。

(1) When towing, remove the spring pin and the pin shaft. Install the tow bar or tow rope in position and reinsert the pin shaft, followed by the spring pin.

(2)拖车完成后先将连接两车的牵引杆或牵引绳松弛下来。

(2) After towing, first loosen the tow bar or rope connecting the two vehicles.

(3)取下弹簧销，拔出销轴，然后取出牵引杆和牵引绳。

(3) Remove the spring pin, pull out the pin shaft, and then take out the tow bar and tow rope.

(4)将销轴复位，插上弹簧销。

(4) Reset the pin shaft and reinsert the spring pin.

危险

严禁使用其它件代替拖车钩销轴，否则安装不规范可能造成脱钩，引发交通事故；

Do not substitute any other parts for the tow hook pin shaft, as improper installation could result in disconnection and traffic accidents.

弹簧销安装到位，严禁不安装弹簧销，否则颠簸或偏载可能造成销轴脱落，引发交通事故。

The spring pin must be installed correctly; failure to do so may cause the pin shaft to fall out due to bumps or uneven loads, resulting in accidents.

第四章 车辆安全
Chapter 4 Vehicle Safety

4.1.车辆涉水行驶

4.1 Driving in Water

1. 涉水前准备

1. Preparation Before Water Crossing

(1)车辆涉水行驶前需要判断路面水深、流势及是否水中有障碍物；

(1) Before driving through water, assess the water depth, flow, and presence of obstacles.

(2)车辆设计最大涉水深度不超过 200mm，一般不应超过车辆裙边舱底部；

(2) The vehicle's maximum wading depth is designed not to exceed 200mm, and generally should not go beyond the skirt edge of the vehicle.

(3)关闭不必要的电器设备，做好溅水防护；

(3) Turn off unnecessary electrical devices and take

2. 涉水行驶

2. Driving in Water

(1)进入积水区时需要注意观察路面情况，避开水底障碍物（如打开的下水井、水坑等），确保行车安全，安全情况不掌握时严禁行驶；

(1) When entering water-covered roads, observe road conditions, avoid submerged obstacles (such as open manholes, potholes), and ensure safety. Do not proceed if safety cannot be confirmed.

(2)由于制动器受潮或进水，制动力会衰减，应缓慢行驶并与前车保持足够安全距离；

(2) Due to moisture or water ingress, braking force may decrease. Drive slowly and maintain a safe distance from the vehicle ahead.

(3)控制行驶车速，低速缓慢通过，最高车速不大于 10km/h；

(3) Control speed and pass through slowly, with a maximum speed of no more than 10km/h.

(4)严禁车辆在水中停车，并长时间泡在水中，应尽快驶离积水路段，水中行驶时间越短越好。

(4) Do not stop in water or leave the vehicle submerged for extended periods; exit flooded areas promptly.

3. 涉水行驶后

3. After Water Crossing

(1)请踩制动踏板使制动器干燥，并检查制动器是否正常工作；

(1) Press the brake pedal to dry the brakes and check that they are functioning normally.

(2)检查喇叭、车灯、雨刮器等低压电器是否正常工作；

(2) Check if low-voltage devices, such as the horn, lights, and wipers, are working properly.

(3)检查车辆高压电器舱是否进水或积水，应保持舱内无水、清洁，有积水时及时清理；

(3) Inspect the high-voltage electrical compartment for water ingress or accumulation, ensuring it is dry and clean. Remove any accumulated water immediately.

(4)检查高压电器部件情况，不应有进水，应保持良好绝缘；

(4) Check the condition of high-voltage components to confirm no water ingress and maintain good insulation.

(5)涉水行驶中导致高压电器件故障时，尽快驶离积水区，联系售后人员处理；

(5) If high-voltage component issues occur during water crossing, leave the flooded area as soon as possible and contact after-sales service.

(6)涉水行驶中发生电器故障（冒烟起火、绝缘漏电、自动断电等）抛锚时，应关闭车辆电源，尽快联系救援车拖离积水区，联系售后人员处理；

(6) If electrical issues (such as smoke, fire, insulation leakage, or automatic power-off) occur and the vehicle stalls, turn off the power and promptly contact a rescue vehicle to tow the vehicle out of the water, and contact after-sales service.

4. 车辆泡水处理

4. Flooded Vehicle Handling

(1)当车辆发生泡水事故时，严禁上电，应断开手动检修开关，清理积水和污物；

(1) If the vehicle is submerged in water, do not power it on. Disconnect the manual maintenance switch and remove any water or debris.

(2)整车高压电器件检查，电机、电池、空压机、助力油泵绝缘及防护等；

(2) Inspect high-voltage components, including insulation and protection for the motor, battery, air compressor, and power steering pump.

(3)检查助力油脂，底盘制动阀件，润滑油等，排除因泡水产生的故障；

(3) Check power steering fluid, chassis brake valves, lubricants, etc., and address issues caused by submersion.

(4)禁止车辆上电操作，并通知亚星客车服务人员。

(4) Do not operate the vehicle's power systems, and inform Yaxing Bus Service.

(5)泡水事故车辆，停放 48 小时后，无异常(冒烟、高温、电火花、焦糊味等)可进车间维修。如出

现异常情况 （冒烟、高温、电火花、焦糊味等），请及时报警求助。

(5) For a vehicle involved in a water submersion incident, wait 48 hours before servicing. If no abnormalities (such as smoke, high temperature, electric sparks, or burnt odors) are present, proceed with repairs. If abnormalities are observed, immediately seek assistance.

(6)维修人员必须经过专业的培训并持有高压电工操作证。

(6) Maintenance personnel must be professionally trained and hold a high-voltage electrician's certification.

4.2.冰雪路面行驶

4.2 Driving on Icy or Snowy Roads

在冰雪路面上，由于路面比较光滑，路面的附着系数较正常的路面小，这会使驾驶时起步较为困难，同时，刹车时，制动距离较正常路面要长，故在冰雪路面上行驶一定要更加谨慎。

On icy or snowy roads, the slippery surface reduces traction, making starting more difficult and extending braking distances. Exercise caution when driving in these conditions.

1. 冰雪路面行驶注意：

1. Precautions for Driving on Icy or Snowy Roads

(1)避免高速行车、急加速、紧急制动和急转弯。

(1) Avoid high speeds, sudden acceleration, emergency braking, and sharp turns.

(2)制动时使用低档，依靠驱动电机倒拖达到减速效果;慎重地使用脚踏制动。上行车时应与前方的车辆保持充分的间距。

(2) Use low gear for braking to achieve deceleration with the drag of the drive motor. Use the foot brake sparingly, and maintain sufficient distance from the vehicle ahead.

(3)路面存在雪水时，为避免各类制动阀体排气口结冰堵塞，造成拖刹隐患，司机应定期（每 3 分钟）踩一次刹车，以保证阀体排气口通畅。

(3) When driving on snow-covered roads with water present, periodically press the brake pedal (every 3 minutes) to prevent the exhaust ports of brake valves from freezing and clogging, which could cause drag braking issues.

⚠注意
当车辆装用防滑链条时，车辆的 ABS 系统将可能失效，使用制动时需慎重。 When using snow chains, the vehicle's ABS system may become disabled; apply brakes with caution.

2. 防滑链安装方法

2. Snow Chain Installation Method

(1)选择与车轮尺寸相配的防滑链；

(1) Select snow chains that match the tire size.

(2)将车辆停放在安全和平坦的路段上，车辆前后保留出 1 米左右的空挡，拉上驻车制动，用停车楔固定轮胎，清理干净轮胎上的积雪。如在繁忙的路上，需要设置必要的交通警示标志；

(2) Park the vehicle on a safe and flat surface, leaving about 1 meter of space in front and behind. Engage the parking brake, secure the tires with wheel chocks, and clear snow from the tires. If on a busy road, set up necessary traffic warning signs.

(3)确认车辆驱动型式，将防滑链安装在驱动轮上。将防滑链靠近轮胎前或后方向上铺开，将连在地面上的每一个链的第一个档靠在轮胎上。确保链条布满颗粒的以免朝向地面。

(3) Confirm the drive type of the vehicle, and install snow chains on the drive wheels. Place the snow chain close to the front or rear of the tire, laying each chain segment on the ground, and ensure that the side with studs faces downward.

(4)如是后轮驱动车辆，将链条倒退着咬紧后固定链条。

(4) For rear-wheel-drive vehicles, back up over the chains to tighten them, then secure the chains.

3. 防滑链的使用注意事项：

3. Snow Chain Usage Precautions

(1)在出行之前安好防滑链，而不要在遇到冰雪路面之后再安装，因为临时停车安装防滑链比提前安装麻烦，也不利于安全；

(1) Install snow chains before encountering icy or snowy roads. Avoid stopping to install chains on icy or snowy roads, as it is more challenging and less safe.

(2)不要在瘪胎情况下安装防滑链；

(2) Do not install snow chains on deflated tires.

(3)安装防滑链后，行驶速度一般不要超过 40km/h，并注意尽可能避免突然加速或减速；

(3) After installing snow chains, limit the vehicle's speed to 40km/h or less and avoid sudden acceleration or deceleration.

(4)防滑链使用过必须使用的路段后，要及时拆除，不能在正常路面使用。

(4) Remove the snow chains immediately after exiting icy or snowy areas. Do not use them on normal road surfaces.

4.3.灭火器

4.3 Fire Extinguisher

4.3.1.手提式干粉灭火器

4.3.1 Portable Dry Powder Fire Extinguisher



图 165 手提式干粉灭火器示意图

Figure 166 Portable Dry Powder Fire Extinguisher Diagram

车辆正常情况下配备 2 只手提式干粉灭火器（具体规格及位置以实车配置为准），一只置于驾驶座椅后面，另一只置于后乘客门前方的座椅后面。当车内发生起火等危险事件时，救援人员可打开灭火器灭火。

Under normal conditions, the vehicle is equipped with two portable dry powder fire extinguishers (specifications and locations are subject to the actual vehicle configuration). One is placed behind the driver's seat, and the other is located behind the seat in front of the rear passenger door. In the event of a fire or other dangerous incident inside the vehicle, rescue personnel can use the extinguisher to put out the fire.

严禁在射程外使用干粉灭火器，否则可能无法达到灭火效果。灭火器喷射时间有限，严禁盲目喷射导致灭火失败。

It is strictly prohibited to use the fire extinguisher outside its effective range, as it may not achieve the desired firefighting effect. The extinguisher's discharge time is limited, so avoid blind discharge to prevent firefighting failure.

各规格灭火器的喷射及失效时间如下表：

The discharge and expiration times of each extinguisher type are shown in the table below:

型号 Model	有效喷射时间 Effective Discharge Time	失效时间 Expiration Time	备注 Notes
2kg	8～16s	24 个月 24 months	1、灭火器到达失效时间时，用户应及时更换，避免失效安全风险。 1. Replace the extinguisher promptly when it reaches its expiration time to avoid safety risks. 2、承保期限参见亚星保修服务管理手册。2. Refer to the Yaxing Warranty Service Management Manual for the warranty period. 3、用户每年需经专业机构检测合格后使用。 3. Users must have it inspected annually by a
4kg	13～26s		
5kg	13～26s		
8kg	15～30s		

灭火器正常压力时，压力表指针在绿色区域（如下图）。当指针在黄色区域时表示超充装，指针在红色区域表示压力不足，此两种状态均不符合要求，应及时处理。

When the extinguisher is at normal pressure, the pressure gauge needle should be in the green zone (see figure below). If the needle is in the yellow zone, it indicates overcharge; if in the red zone, it indicates insufficient pressure. Both of these conditions do not meet requirements and should be addressed immediately.



图 166 手动灭火器压力表示意图

Figure 167 Manual Fire Extinguisher Pressure Gauge Diagram

灭火器使用方法如下图所示：

The extinguisher usage steps are shown below:

1. 提起灭火器→2.拔出安全销→3.用手压下手柄→4.手握喷头灭火

1. Lift the extinguisher → 2. Remove the safety pin → 3. Press the handle → 4. Aim the nozzle at the base of the flames

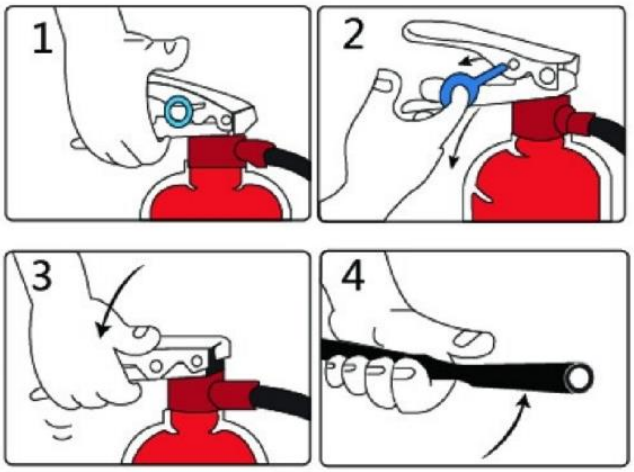

图 167 灭火器使用方法示意图

Figure 168 Fire Extinguisher Usage Diagram

危险

●灭火者严禁站在下风口，距离着火处 2～3m(米)，否则将被烟雾呛伤或烫伤；

●Firefighters should avoid standing downwind at a distance of 2–3 meters from the fire source to prevent inhaling smoke or suffering burns.

●严禁倒置灭火器，否则无法喷出干粉，导致灭火器失效；

●Do not invert the extinguisher; otherwise, the dry powder may not discharge, rendering the extinguisher ineffective.

●严禁灭火器对人员进行喷射，应将喷头对准火苗根部；

●Avoid discharging the extinguisher toward people; aim the nozzle at the base of the flames.

●干粉入眼后，用大量清水冲洗不低于 30min(分钟) ，并立即就医；

●If dry powder enters the eyes, rinse with plenty of water for at least 30 minutes and seek medical attention immediately.

●查看灭火器瓶体上的使用期限，若超期应立即更换；

●Check the usage period on the extinguisher bottle. If expired, replace it immediately.

●使用过期的灭火器，可能无法喷出灭火剂，导致无法灭火；

●Using an expired extinguisher may prevent the agent from discharging, leading to unsuccessful fire extinguishing.

●检查压力是否在正常范围位内(指针应在绿色区域)，及时更换压力不正常灭火器；

●Check whether the pressure is within the normal range (the needle should be in the green zone). Replace the extinguisher if the pressure is abnormal.

4.3.2.手自一体超细干粉式灭火器

4.3.2 Manual/Automatic Ultra-Fine Dry Powder Fire Extinguisher

系统构成

System Components

本装置由超细干粉灭火剂、驱动介质、灭火剂贮罐、引发器组件（热引发组件、电引发组件选装）等部件组成，与火灾报警系统联动时，能在车辆电器舱、驱动电机舱、动力电池舱等部位起火时，自动启动完成灭火。自动开启失效时可通过手动启动开关启动灭火器，该开关安装于仪表台位置，操作时掀开上盖。灭火器和传感器安装车辆电器舱、电池舱和驱动电机舱等部位。

This device consists of ultra-fine dry powder extinguishing agent, a driving medium, an extinguishing agent storage tank, and initiator components (optional thermal and electric initiator components). When connected to the fire alarm system, it can automatically activate in the event of a fire in the vehicle's electrical compartment, drive motor compartment, or power battery compartment. If automatic activation fails, the extinguisher can be activated manually via a switch on the instrument panel by lifting the cover. The extinguisher and sensors are installed in the vehicle's electrical compartment, battery compartment, and drive motor compartment.



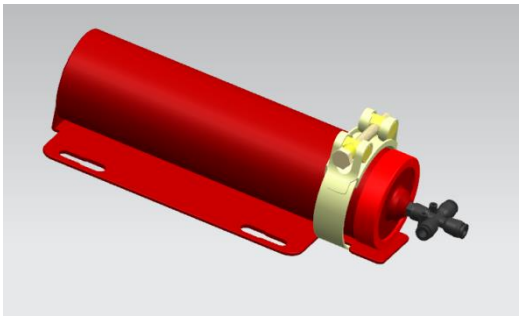

图 168 手动启动开关示意图　　图 169 超细干粉灭火器示意图

Figure 169 Manual Activation Switch Diagram

Figure 170 Ultra-Fine Dry Powder Fire Extinguisher Diagram

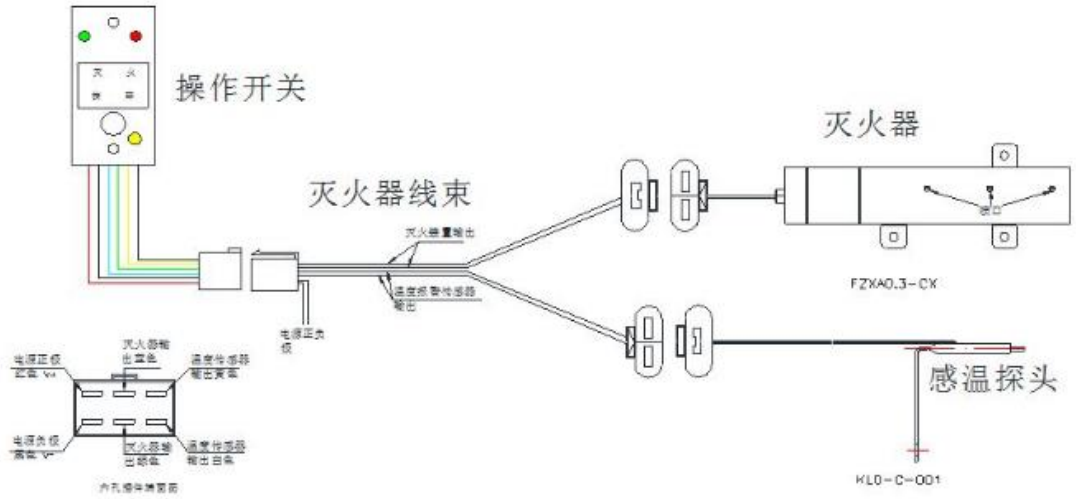

图 170 超细干粉灭火器工作原理示意图

Figure 171 Ultra-Fine Dry Powder Fire Extinguisher Working Principle Diagram

危险

使用和维护注意事项

Usage and Maintenance Precautions

●灭火器使用有效期为 24 个月，用户每年需经专业机构检测合格后使用，质保期限参见亚星保修服务管理手册。

●The extinguisher has a service life of 24 months. Users must have it inspected annually by a professional agency. Refer to the Yaxing Warranty Service Management Manual for warranty information.

●该车用干粉灭火装置为非贮压式。

●This dry powder fire extinguishing device is non-pressurized.

●使用有效期过后，不得自行拆除处理，应及时更换同品牌型号产品，如更换其它类型产品，可能会导致灭火器不能正常工作。

●After the service life, do not disassemble it. Replace it with the same brand and model. Using other types of extinguishers may lead to malfunctions.

●灭火器起爆使用过后，应及时更换同品牌型号产品，如更换其它类型产品，可能会导致灭火器不能正常工作。

●Replace the extinguisher with the same brand and model after it has been used for firefighting. Using other types may lead to malfunctions.

●灭火器系统线束或其它部件在火情后有损坏的，应及时更换和维护，否则会导致灭火器不能正常工作。

●If the extinguisher system wiring or other components are damaged after a fire incident, replace or repair them immediately. Failure to do so may render the extinguisher ineffective.

4.3.3.动力电池箱灭火系统

4.3.3 Battery Compartment Fire Suppression System

车辆如安装电池箱灭火系统。该系统设计有多种高灵敏的传感器，能实时监测各动力电池箱内因电池内部短路、过充过放、外部短路而引起的温度和烟雾变化、特征气体、电解液泄漏等热失控早期特征，并利用动力电池热控模型综合判断燃烧阶段，同时可联动降温型火灾抑制装置，实现早期感知、智能判断、火情抑制、阻隔热扩散条件。

If a battery compartment fire suppression system is installed on the vehicle, this system is equipped with multiple high-sensitivity sensors that can monitor in real-time for early signs of thermal runaway in each power battery compartment, such as temperature and smoke changes, characteristic gases, and electrolyte leakage caused by internal battery short circuits, overcharge, over-discharge, or external short circuits. Using the thermal control model for power batteries, the system comprehensively assesses the combustion stage, and in coordination with a cooling-type fire suppression device, it enables early detection, intelligent assessment, fire suppression, and thermal diffusion isolation.

1. 组成

1. Composition

电动客车动力锂离子电池箱火灾防控装置由监测模块、喷头组件、报警模块、防护模块、数据模块、分流阀及管路辅件等组成。

The fire prevention and control device for the lithium-ion battery compartment of electric buses consists of a monitoring module, nozzle components, alarm module, protection module, data module, diverter valve, and pipe fittings.



图 171 仪表台操作开关及报警模块示意图

Figure 172 Instrument Panel Operation Switch and Alarm Module Diagram

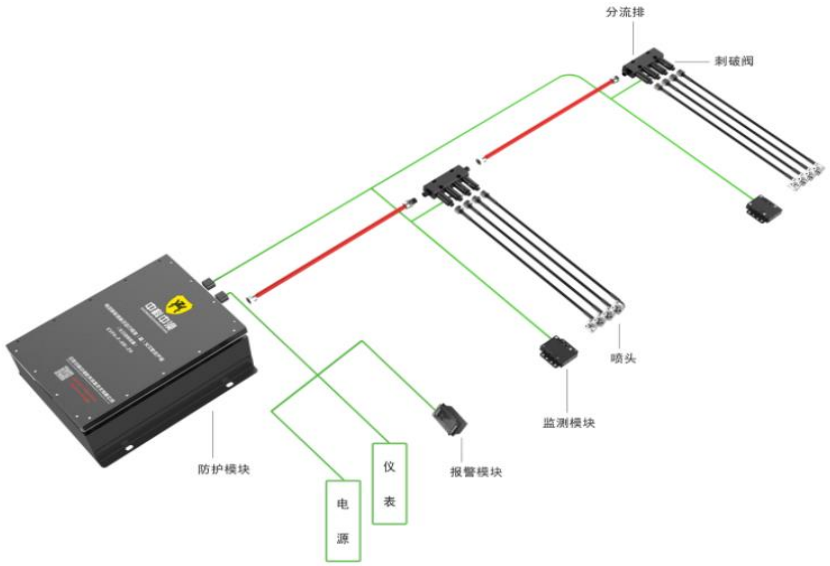

图 172 系统连接结构示意图

Figure 173 System Connection Structure Diagram

2. 工作原理

2. Working Principle

动力电池箱火灾防控装置通过各电池箱内监测模块，将监测到的数据经 CAN 总线实时上传至数据模块和防护模块。数据模块可将接收到的 CAN 信号上传至整车仪表通过整车转发至调度平台，并将 CAN 信号转换成开关量信号上传至报警模块。根据报警级别系统会自动启动末端灭火器，特殊情况下也可以手动操作启动。

The fire prevention and control device for the power battery compartment transmits the monitored data from each battery compartment's monitoring module in real time via the CAN bus to the data module and protection module. The data module can send the received CAN signal to the vehicle's instrument panel, which forwards it to the dispatch platform. It also converts the CAN signal into a switch signal to be sent to the alarm module. Based on the alarm level, the system automatically activates the terminal extinguisher, and in special cases, it can be manually activated.

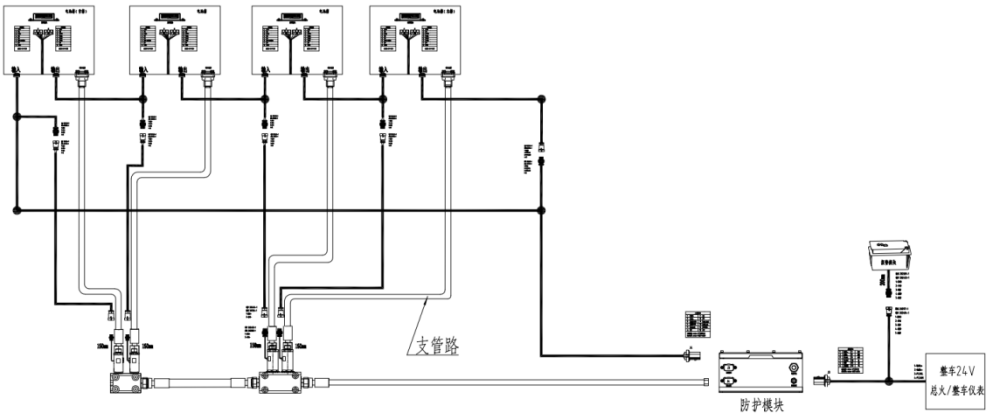

图 173 系统连接原理示意图

Figure 174 System Connection Principle Diagram

3. 产品功能

3. Product Functions

序号 No.	功能 Function	内容 Description
1	多参数监测 Multi-Parameter Monitoring	通过集成温度、烟雾、CO、VOC多种传感器，实现对电池热失控多种状况的实时探测； Real-time detection of various battery thermal runaway conditions using temperature, smoke, CO, and VOC sensors.
2	分级预警 Graded Alarm	通过多参数实时监测，软件复合判断,及时发现电池工作中的异常状况，实现火灾预警。 根据监测到的数据，判断热失控阶段，实现分级报警，分为初级报警和高级报警。 初级报警阶段可以实现手动联动启动，高级报警模块可实现系统自启动； By monitoring multiple parameters in real time and making complex software assessments, the system can detect abnormal battery conditions early, enabling fire warning. The system assesses the thermal runaway stage and provides graded alarms, including primary and advanced alerts. Manual linkage activation is possible at the primary alert stage, while the advanced alert module enables system auto-activation.
3	故障报警 Fault Alarm	双路通讯模式,对监测模块传感器故障、数据采集异常、CAN通讯掉线故障、防护装置系统故障等及时发出故障报警信息，确保系统运行的可靠性； Dual communication mode issues fault alarms for sensor malfunctions, data acquisition anomalies, CAN communication disconnection, and protective device faults, ensuring system reliability.
4	程序和数据存储 Program and Data Storage	数据模块将各监测模块发送的异常数据和报警信息，按照时间进行存储和记录。 The data module stores and records abnormal data and alarm information from each monitoring module by time. 存储空间128M-BIT，16M字节，自带存储芯片和时钟芯片，针对电池箱内异常数据，按照年、月、日进行记录，周期不大于1S，总时间大于30min，且异常数据永不擦除。 It features 128M-BIT (16M bytes) of storage, with its own storage and clock chips, recording abnormal data in the battery compartment by year, month, and day with a cycle time no greater than 1 second and a total recording time exceeding 30 minutes. Abnormal data is never erased.
5	在线升级 Online Upgrade	系统具备程序在线升级功能，可实现对程序和数据的升级、更新； The system supports online upgrades for program and data updates.

序号 No.	功能 Function	内容 Description
6	系统ID编码功能 System ID Coding	系统具备上位机编码实现监测模块ID号编码功能； The system supports coding of monitoring module ID numbers through an upper-level computer.
7	休眠唤醒功能 Sleep Wake-Up	具备低功耗功能，通过控制VOC传感器加热电源和MCU睡眠实现低功耗，休眠唤醒信号由CAN报文获取； Equipped with low-power features that allow low power consumption by controlling the VOC sensor heating power and MCU sleep, with the wake-up signal obtained from CAN messages.
8	启动反馈 Activation Feedback	灭火装置启动后，会发出启动反馈信号给数据模块，并上传至报警模块或仪表； After the extinguisher is activated, an activation feedback signal is sent to the data module and uploaded to the alarm module or instrument panel.
9	高效灭火、降温 Efficient Fire Suppression and Cooling	确认电池箱内部火情之后，灭火剂直接作用到电芯表面，迅速扑灭明火，并将电池箱内部的环境温度将至安全的范围内； After confirming a fire inside the battery compartment, the extinguishing agent is applied directly to the battery cells, quickly extinguishing the flames and lowering the internal temperature to a safe range.
10	自备电源 Built-In Power Supply	灭火装置内自备备用电源，可保证系统在车辆断电72h正常工作，系统发现异常可以正常工作。 The fire extinguisher has a built-in backup power supply that ensures the system can operate normally for 72 hours after a power outage, allowing it to function properly if an abnormality is detected.

⚠注意

上述配置仅供参考使用，具体应以实车为准。

The above configurations are for reference only and are subject to the actual vehicle configuration.

4.3.4.客舱固定灭火系统（选装）

4.3.4 Passenger Compartment Fixed Fire Suppression System (Optional)

本系统由控制开关、主机(灭火剂)、喷头三个部分组成，主机一般位于中门前，其主要作用是存储灭火剂，灭火启动报警开关位于仪表台上，印有“灭火开关”字样。

This system consists of a control switch, main unit (extinguishing agent), and nozzle. The main unit, typically located in front of the middle door, primarily stores the extinguishing agent. The fire suppression

activation alarm switch, labeled “Fire Suppression Switch,” is located on the instrument panel.







图 174 灭火启动报警开关示意图　　图 175 灭火器主机示意图　图 176 灭火系统喷头示意图

Figure 175 Fire Suppression Activation Alarm Switch Diagram

Figure 176 Fire Extinguisher Main Unit Diagram

Figure 177 Fire Suppression System Nozzle Diagram

1. 指示灯显示

1. Indicator Lights

绿色灯亮：表示电源接通且系统正常。

Green light on: Indicates that the power is on and the system is operating normally.

绿色、黄色灯同时亮起：表示电源接通但系统存在故障需排查。

Green and yellow lights on simultaneously: Indicates that the power is on but there is a system fault that requires inspection.

2. 使用方法

2. Usage

需要开启灭火系统时，请先停稳车辆，按以下操作进行：

When activating the fire suppression system, ensure the vehicle is stopped, then proceed as follows:

(1)打开乘客门等车辆出口，疏散、撤离车上人员。

(1) Open the passenger doors and other vehicle exits to evacuate personnel on board.

(2)同时打开“灭火启动报警开关”的上盖，按下启动按钮，3～4 秒后系统开始进行喷洒工作，同时警铃开始闪烁并发出警报。

(2) Open the cover of the “Fire Suppression Activation Alarm Switch” and press the activation button. The system will begin spraying 3–4 seconds later, with the alarm flashing and sounding.

(3)灭火剂喷洒结束后，系统自动停止工作。

(3) After the extinguishing agent finishes spraying, the system will automatically stop.

3. 喷头

3. Nozzle

喷头位于客舱顶盖中部，启动系统后灭火剂从喷头处喷出进而覆盖整个客舱，起到迅速降温并扑灭明火的作用。

The nozzle, located in the middle of the passenger compartment ceiling, sprays extinguishing agent over the entire passenger compartment when activated, quickly lowering the temperature and extinguishing flames.

警告

●请勿擅自拆卸管路主机等装置；灭火系统使用一次后，请及联系厂家添加灭火剂；

●Do not disassemble the main unit or other parts of the piping. After one use of the fire suppression system, contact the manufacturer to refill the extinguishing agent.

●组合仪表显示“客舱水雾传感器故障”字样并伴有警报声，表示主机内液位传感器出现故障需排查；

●If “Passenger Compartment Water Mist Sensor Fault” appears on the instrument panel with an accompanying alarm sound, this indicates a fault in the liquid level sensor in the main unit that requires inspection.

●组合仪表显示“客舱水雾灭火剂液位不足”字样并伴随有警报声，表示主机内天火剂容量小于 70%，需及时联系亚星服务站添加灭火剂；

●If “Passenger Compartment Water Mist Extinguishing Agent Low Level” appears on the instrument panel with an alarm sound, it means the extinguishing agent level in the main unit is below 70%, and it is necessary to contact a Yaxing service station to refill the extinguishing agent.

●注意日常检查灭火系统有效使用日期，并注意在过期前进行更换。

●Regularly check the effective usage date of the fire suppression system and replace it before expiration.

4.4.禁止事项

4.4 Prohibited Actions

1. 车辆上电必须在 ON 档等待，直到仪表灯点亮，自检正常后方可起动，禁止直接将钥匙打到 Start 起动。车辆下电后，需等待仪表完全熄灭 10 秒后，才能上电，不可短时间重复快速上电和断电!

1. When powering on the vehicle, wait in the ON position until the dashboard lights illuminate and self-check completes before starting. Do not directly turn the key to the Start position. After powering off the vehicle, wait until the dashboard lights are completely off for 10 seconds before powering on again.

Avoid quick repeated power on and off actions in a short time.

2. 禁止非专业人士对电动车进行维修操作，禁止触碰、拆解带有警告标识的高压电器件及橙色高压线。

2. Non-professionals are prohibited from performing maintenance on electric vehicles. Do not touch or disassemble high-voltage components with warning labels or the orange high-voltage wires.

3. 对高压部件进行维护检查前，车辆禁止移动，须断高低压电至少 10 分钟后，确保高压部件已停止工作。

3. Before maintaining or inspecting high-voltage components, do not move the vehicle. Disconnect both high and low voltage power supplies for at least 10 minutes to ensure that high-voltage components have ceased operation.

4. 对高压部件进行维护检查前，须将高压维护开关先拔出。

4. Before maintaining or inspecting high-voltage components, remove the high-voltage maintenance switch.

5. 对高压部件进行维修操作时，必须佩戴绝缘手套，穿绝缘鞋，使用绝缘工具，禁止违规操作。

5. When performing maintenance on high-voltage components, wear insulated gloves, insulated shoes, and use insulated tools. Avoid improper operations.

6. 充电过程中禁止将充电枪拔出。

6. Do not disconnect the charging gun during charging.

7. 电池等高压器件维修更换时须轻拿轻放，不可发生碰撞，严禁脚踏等行为。

7. When replacing or repairing high-voltage components like the battery, handle them carefully. Avoid collisions, and strictly prohibit stepping on them.

4.5.紧急处理

4.5 Emergency Handling

1. 紧急断电方法

1. Emergency Power-Off Method

当车辆遇到紧急情况时，关闭电源方法如下：将钥匙开关打到 OFF 挡、关闭电磁式电源总开关翘板开关，断开低压电源总开关（手闸），如果时间允许，确保安全情况下，断开高压维护开关。

In case of an emergency, power off the vehicle as follows: turn the key switch to the OFF position, turn off the electromagnetic power main switch toggle switch, and disconnect the low-voltage main switch

(handbrake). If time permits and safety is ensured, disconnect the high-voltage maintenance switch.

2. 故障应急处理

2. Fault Emergency Handling

当车辆出现紧急事件时，处理方法如下表所示。在安全停车后，请及时联系亚星维修站维修处理。

In case of an emergency, refer to the following handling methods. After safely parking, contact Yaxing service station promptly for maintenance.

紧急事件处理方法

Emergency Event Handling Methods

紧急事件 Emergency Event	处理方法 Handling Method
行车中刹车失灵 Brake failure while driving	1、关闭钥匙； 1. Turn off the key. 2、拉起手刹。 2. Pull the handbrake.
行车中油门失控 Accelerator malfunction while driving	1、 紧急制动停车； 1. Perform an emergency brake to stop. 2、关闭钥匙。 2. Turn off the key.
行车转向助力失效 Steering assistance failure while driving	1、 控制稳方向盘； 1. Steady the steering wheel. 2、打开危险信号开关，紧急停车； 2. Turn on the hazard lights and stop immediately. 3、检查转向助力系统； 3. Check the steering assistance system. 4、问题仍存在，低速开回停车场检查。 4. If the issue persists, drive at low speed to the parking area for inspection.
充电过程有异味 Unusual smell during charging	1、 立即关闭充电机总电源开关； 1. Immediately turn off the main power switch of the charger. 2、检查动力电池组、高压线束及其连接端子； 2. Check the battery pack, high-voltage harness, and connections. 3、检查充电机； 3. Inspect the charger. 4、问题处理后方能再充电。

紧急事件 Emergency Event	处理方法 Handling Method
	4. Resume charging only after resolving the issue.
车辆完全或部分泡水 Vehicle fully or partially submerged in water	1、处理任何淹没的车辆时，应穿戴好个人防护装备（PPE）。 1. Wear personal protective equipment (PPE) when handling submerged vehicles. 2、尽快将车辆从水中拖出，且短时间内不要接通高压电源。 2. Tow the vehicle out of the water as soon as possible and avoid connecting to high-voltage power for a short time.
车辆发生碰撞 Vehicle collision	1、 紧急关机； 1. Perform an emergency shutdown. 2、 检查动力电池箱体是否受损； 2. Inspect the battery compartment for damage. 3、若电池箱体发生严重变形、高压线束破损等情况，及时与我司指定售后服务处联系，确认无安全隐患后才能行车或拖车。 3. If the battery compartment is severely deformed, high-voltage harness is damaged, etc., promptly contact our designated after-sales service center. Confirm no safety hazards before driving or towing.
车辆发生绝缘漏电 Insulation leakage	1、紧急关闭高压电源； 1. Turn off the high-voltage power immediately. 2、检查动力电池、驱动电机、高压线束等所有高压部件是否有破损； 2. Inspect all high-voltage components, including the battery, drive motor, and high-voltage harness, for damage. 3、及时与我司指定售后服务处联系，确认无安全隐患后才能行车或拖车。 3. Promptly contact our designated after-sales service center. Confirm no safety hazards before driving or towing.

危险

火灾处理

Fire Response

●任何部位起火时，立即疏散车内及周边人员，及时关机，具体见以上“紧急关机方法”，并对现场进行隔离。

●In case of fire, immediately evacuate passengers and surrounding personnel, shut down the vehicle following the "Emergency Power-Off Method" above, and isolate the area.

●观察如果火势轻微：非高压储能元件起火，使用车载二氧化碳或干粉灭火器对准火源进行灭火；动力电池或超级电容起火（车外）远距离使用高压水枪灭火。

●If the fire is minor: For fires not involving high-voltage energy storage components, use the onboard CO_2 or dry powder fire extinguisher to target the fire source. For fires involving power batteries or supercapacitors outside the vehicle, use a high-pressure water jet from a safe distance.

●如果火势较大，请立即拨打 119 火警电话，通知消防部门，并且联系车辆售后服务人员。

●If the fire is severe, call 119 for fire services immediately, notify the fire department, and contact vehicle after-sales support.

现场处置

On-Site Handling

●动力电池被引燃，或因外力导致弯曲、扭曲、损坏或以任何形式被破坏时，怀疑电池温度正在上升，请用大量水为电池降温。如果电池系统高压部分着火失控，则可能需要长达数小时才能完全熄灭。需要不断喷入大量的水进行降温，同时使用水隔离高温燃烧部分，以降低被引燃周边物体的可能性。直至失控部分完全扑灭，并确认无任何明火且无复燃的可能性，方可停止喷水。

●If the power battery ignites or is bent, twisted, damaged, or otherwise compromised due to external forces and there is concern the temperature is rising, use a large volume of water to cool the battery. For high-voltage components on fire and out of control, it may take hours to fully extinguish. Continuously apply large amounts of water to cool down and use water to isolate the burning areas to prevent nearby objects from catching fire. Continue until the uncontrolled part is fully extinguished and confirmed to have no open flames or possibility of re-ignition.

●电池拆装前使用热成像仪确保动力电池已经完全冷却，如果没有热成像仪，则必须监视动力电池，以免再次点燃。如果还在冒烟，则表示电池仍然在反应。在至少一个小时内电池没有出现冒烟的迹象之后，才能将车辆移交至第二相应人员。务必告知第二相应人员（拖车人员等）电池存在重

危险

新点燃的风险。

●Before removing the battery, use a thermal imaging camera to confirm the power battery has fully cooled. If a thermal imaging camera is not available, monitor the battery to prevent re-ignition. If the battery is still smoking, it indicates a reaction is still occurring. Only after no smoke appears for at least one hour can the vehicle be handed over to the next responsible personnel. Inform the next personnel (e.g., towing personnel) of the risk of battery re-ignition.

●当车辆经历淹没、火灾或碰撞事故之后，受损的动力电池系统一定要存放在开放区域中，15 米内不得有任何人员。

●After incidents involving submersion, fire, or collision, store the damaged power battery system in an open area, keeping a radius of 15 meters clear of all personnel.

●燃烧或加热的动力电池释放出的气体具有一定的毒性，其中包括碳氧化物等气体以及、镍、铝、锂、铜和钴等粉体物质。响应人员应穿戴全套个人防护设备（PE），包括自给式呼吸器（SCBA），并采取适当措施保护处于事故下风向的民众，使用喷雾射流或正压通气（PPV）风扇疏导气体。

●Gases released by burning or heating of power batteries are toxic, containing carbon monoxide and particulate substances such as nickel, aluminum, lithium, copper, and cobalt. Response personnel should wear full personal protective equipment (PPE), including a self-contained breathing apparatus (SCBA), and take appropriate steps to protect people downwind of the accident, using mist jets or positive pressure ventilation (PPV) fans to disperse the gases.

4.6.其它安全设施

4.6 Other Safety Equipment

4.6.1.安全锤

4.6.1 Safety Hammer

安全锤位于应急窗旁，当发生危险时，请拿下安全锤，砸开应急窗，便于乘客逃生。安全锤取下时会发出“滴滴”报警声。安全锤附件张贴有使用警示说明，请注意阅读。玻璃在边角处张贴有敲击点提示标志。

The safety hammer is located next to the emergency window. In case of danger, remove the safety hammer to break open the emergency window for passenger escape. Removing the safety hammer triggers a “beep” alarm sound. Usage instructions are posted on the safety hammer attachment; please read them carefully. The

glass has marked points at the edges indicating where to strike.





图 177 安全锤示意图

Figure 178 Safety Hammer Diagram

图 178 警示说明示意图

Figure 179 Warning Instructions Diagram

4.6.2.安全带

安全带是指用于车辆骤然减速或撞车时通过限制佩戴者身体的运动以减轻其伤害程度的总成。为了您的安全，每次行驶前请系好安全带。

1. 安全带分类

本车型驾驶员座椅配备三点式安全带，乘客座椅可选装两点式安全带，如选装需执行本说明书中相关要求。

(1) 三点式安全带



图 179 三点式安全带位置示意图

由卷收器 、织带、锁舌、锁扣四部分组成

⚠警告

安全带卷收盒附近禁止放置其它物品，否则可能损坏卷收盒。

(2) 两点式安全带（选装）

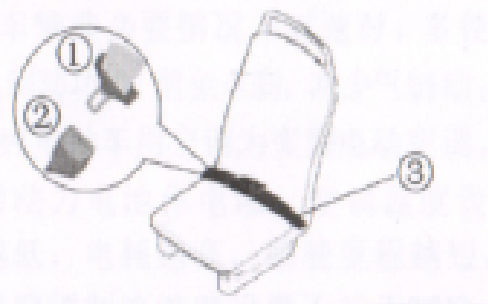

图 180 两点式安全带示意图

两点式安全带由：①锁舌、②锁扣、③织带三部分组成。

2. 佩带、脱开安全带

(1) 佩带安全带



图 181 安全带佩带示意图

a. 拉住锁舌将安全带缓慢、匀速拉出，围过胸部或髋部。

危险

●严禁将织带围在颈部，否则车辆紧急制动或发生碰撞等事故时，可能造成颈部伤害，甚至造成人员窒息、伤亡。

●严禁将肩部织带夹在臂下，否则安全带将无法发挥其保护功能，车辆紧急制动或发生碰撞等事故时，甚至造成驾乘人员更严重的伤亡。

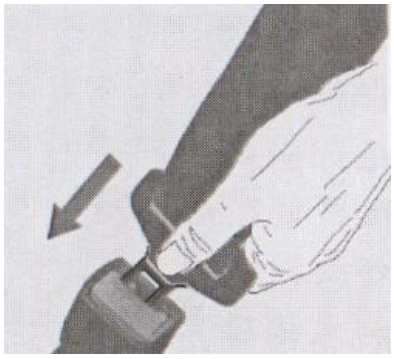

图 182 锁止安全带操作示意图

b.将锁舌插入属于本座椅的锁扣，直到听到啮合的声响。

c.拉一下安全带，确保锁舌固定在锁扣内

危险

●锁扣插口堵塞时，立即进行清理，否则因安全带锁舌无法正确卡入位，造成安全带无法发挥其保护功能，甚至车辆发生事故时造成驾乘人员更严重的伤亡。

●严禁不围织带将锁舌或用其它物品直接插入锁扣，屏蔽报警信息，否则安全带将无法发挥保护功能。

●安全带佩戴者如植入有心脏起搏器，严禁将织带压在心脏上面，否则紧急制动或者发生碰撞时，安全带收紧可能压迫起搏器造成人员伤亡。

●严禁将织带置于背后，否则安全带将无法发挥保护功能。

●髋部织带必须始终紧贴髋部尽可能低的位置，严禁围在腹部，否则车辆紧急制动或发生碰撞等事故时，使用者腹部可能受到伤害，甚至增加使用者伤亡风险。

●每个安全带只允许系一人，严禁双人使用，尤其不要抱孩子共用一条安全带。

●12 岁以下或身高不足 1.5M 的儿童不能使用三点式安全带，可在成人监护使用两点式安全带，切勿在无监护下单独使用。

●严禁安全带织带松垮，否则安全带无法发挥其保护功能，发生事故时可能造成乘员的伤亡。

(2) 脱开安全带



图 183 脱开安全带操作示意图

a. 按下安全带锁扣上的红色按钮，锁舌弹出，安全带即可脱开。

b. 安全带使用后，使其恢复自然状态。

危险

●驾驶员座椅安全带织带未能自动缩回时，需手动轻拉织带使其缩回。如手动干预无法收回，应立即更换配件，否则安全带功能失效，车辆紧急制动或发生碰撞等事故时，增加驾乘人员伤亡风险。

●安全带不用时，严禁锁扣向上放置，否则可能扎伤人员。

3. 安全带使用注意事项

(1) 安全带佩带过程中应平顺、与人员身体贴合，严禁扭曲。

(2) 严重事故中使用过或承受过一次强力负荷的安全带，需立即更换，禁止再次使用。

(3) 保持安全带清洁和干燥，严禁使用带腐蚀性的清洁剂清洁安全带。

(4) 安全带应无磨损、割裂或受其它形式的损坏，否则需立即更换安全带，禁止使用。

(5) 座位安全带不能正常展开、使用时，不允许入座。

(6) 严禁安全带附件放置其它物品，否则可能损坏安全带。

危险

●严禁安全带绕过锋利、坚硬或易碎物品，否则可能损坏安全带。

●严禁擅自拆卸、拆解或改装安全带否则造成安全带无法发挥其保护功能，甚至发生事故时可能造成乘员更严重的伤亡。

●严禁在身体和安全带之间放置任何物品(如不穿的衣物、靠垫、热水袋等)，否则安全带无法发挥其保护功能，甚至发生事故时可能造成乘员更严重的伤亡。

4. 孕妇佩带安全带使用要求

(1)髋部安全带，尽在可能低的位置。且不可围在腹部。必要时，将髋部安全带推至髋关节以下位置，以免腹部受压。

(2)每次产检应咨询医生，您是否适合驾驶车辆或佩带安全带。

危险

●如未正确佩戴安全带，则在紧急制动或发生碰撞时，可能导致孕妇和胎儿受到严重伤害甚至死亡。

5. 驾驶员未系安全带报警说明

(1)组合仪表安全带未系指示灯闪东亮并发出警报声。

(2)乘客座椅选装两点式安全带时，车内所有乘员应按要求、正确佩带安全带。严禁未系安全带行车，否则发生事故时增加伤亡风险。

(3)严禁行车过程中解开安全带，车辆完全停稳后，方可解开安全。

4.6.3.安全出口

安全出口是在紧急情况下为乘客提供安全下车的通道。它包括安全顶窗和安全侧窗，安全顶窗还具有自然通风及强制通风功能。

4.7.乘客门及紧急开关

1. **乘客门**



图 184 乘客门示意图

前乘客门为双扇电动内摆门，设在客车前轮前部；中乘客门为双扇电动内摆门，设在客车右侧两车轮之间；后乘客门为双扇电动内摆门，设在客车右侧后车轮后部。

2. **车外前乘客开关门按钮或遥控**

车辆在前乘客门外部，前风挡玻璃下沿位置设计有开关门按钮（下图圈内），用于驾驶员在车外操作车门开闭，按钮附近张贴使用说明，或者使用遥控按钮操作车门开闭，具体以实车配置为准。



图 185 车外前乘客开关门按钮示意图

3. **车内控制与使用**

当乘客门机构锁打开后，可使用仪表台上带符号的翘板开关控制前门和中门开闭。

4. **应急控制阀使用**

当紧急状态或车门气路中气压不满足工作气压（小于 0.4MPa）时，使用乘客门附近的应急放气阀或者旋转副仪表台侧应急放气阀，等待 6 秒左右排气后可以手动打开车门。

当发生紧急情况时（车外）打开乘客门外侧附近的应急阀开关盖；顺时针旋转开盖内的红手拔开关，手动打开乘客门。

当发生紧急情况时（车内）打开乘客门内侧附近的应急阀开关盖，顺时针旋转开盖内的红手拔开关，手动打开乘客门紧急情况下可使用仪表台附近的紧急阀放气，然后手动打开乘客开门。



图 186 车外应急阀示意图



图 187 乘客门内应急阀示意图



图 188 仪表台应急阀示意图

危险

●安全放气阀仅在乘客门出现故障或紧急情况下使用。

●日常注意检查气路有无漏气现象，确保乘客门正常开启和关闭。

●将放气开关拧回原位时，注意防止气路快速充气带来的乘客门突然开或关造成的人员伤害。

●乘客门开启、关闭过程中，门板运动区域内禁止站人。

●严禁乘客门开关功能正常或非紧急情况下使用应急阀。

●车辆行驶时，保持车内外阀处于复位状态，否则车辆运行中可能造成乘客门损坏。

●严禁连续多次使用应急阀开门，否则因车辆气压不足。造成乘客门不能正常关闭，甚至安全事故和人员伤亡。

●车辆行驶过程中严禁开门，否则会造成安全事故，甚至人员伤亡。

5. 乘客门常见故障处理

序号	故障	原因	排除方法
1	车门自动打开	防夹开门位置不适当	调整防夹开关位置和参数
2	开关门时门扇抖动	偏心轮位置不适合	调整偏心轮
3	门开启或关闭中卡滞	门泵或电磁阀漏气	更换配件
4	开关门无反应	电路不通 气路不通或漏气或气压小于 0.4MPa	请电工修理 修理气路或充气

序号	故障	原因	排除方法
5	能开不能关功能关不能开	控制回路故障 电磁阀线圈故障	请电工修理 更换电磁阀
6	开关门速度过快或过慢	气缸调速接头未能调好 气路不畅或气压不足	调整接头 修理气路或充气
7	防夹功能失效	防夹开关关闭 门泵摇臂位置错误 防夹控制器故障	打开防夹开关 调整摇臂位置 更换防夹控制器

6. 上、下车辅助设施



图 189 上、下车扶手示意图

上、下车扶手主要供乘客上、下车时抓扶用，安装在乘客门内侧。位置如上图所示。扶手表面要经常保持清洁、干燥，不能附有油污等其它影响抓扶效果的杂物。

4.8.驾驶员防护栏

1. 护栏作用

驾驶员防护栏用于阻隔乘客与驾驶员，保障驾驶员安全操作的隔离设施，在驾驶员遇乘客威胁、袭击或抢夺方向盘等事件时起到防护作用。



图 190 驾驶员防护栏及护栏门锁示意图

2. 护栏门锁操作方式

(1) 从外部开锁

从外部开启围门时，用按按钮，可将围门开启。

(2) 从内部开关锁

从内部开启围门时，用按按钮，可将围门开启。

从内部关闭围门时，用按按钮，围门可锁住。

警告

●包围采用升降玻璃时，驾驶员正常使用时围门玻璃必须升起，升起后高度不低于 1600mm。

●包围上玻璃是驾驶员安全驾驶的重要设施之一，务必保证玻璃完整、无损。

●玻璃损坏时，需更换符合标准的玻璃。

4.9.遮阳帘

遮阳帘用于防止驾驶员炫目、视觉疲劳。有两种形式：手动式和电动式，请注意您的车辆配置。



图 191 司机窗遮阳帘示意图



图 192 前挡风玻璃遮阳帘示意图

1. **电动式操作：**司机遮阳帘翘班式开关，此开关可控制司机遮阳帘下降/上升至理想位置。

2. **手动式操作：**下拉遮阳帘中部，拉至理想位置松开，遮阳帘锁止。如果司机窗立柱上有拉绳，拉动拉绳，遮阳帘收缩。如果司机窗立柱上没有拉绳，下拉遮阳帘至极限位置，然后松开，遮阳帘即上升或直接上推遮阳帘中部即可。

4.10.三角警告牌和随车工具

1. 三角警告牌的使用、放置

(1)当车辆出现故障或其它原因时，需将车辆停止在不影响正常交通的位置，取出三角警告牌。

(2)三角警告牌参照以下方式摆放：一般道路上，放置在车后 50～100 米处，高速路上，放置在车后方 150 米以外的地方，需将反光面朝向来车方向。

2. 随车工具

随车工具随车发运，接车后需妥善保管，使用过程中应注意以下几点：

(1)出厂时提供的汽车千斤顶按规定只能用于本车型，不得举升其它更重的车辆或其它重物，汽车千斤顶重新放回其固定位置之前，请把汽车千斤顶臂完全收回，否则有受伤危险。

(2)汽车举升起来后，不得启动车辆，否则有发生事故的危险。

(3)如果必须在车辆下面工作时，一定要用合适的垫块将车辆牢固支撑，否则有受伤危险。

(4)车辆停放时为防滑坡，请在后轮处增加防滑垫块（发车时随车配带有三角防滑垫块）。

4.11.气压表征数据

整车气压 1MPa 状态时，气压表征数据如下：

空压机/卸荷阀	最大截止压力= 1.06MPa
多回路保护阀	静态关闭压力≥0.45MPa
储气筒额定工作压 **（气压制动系统）**	1MPa
计算用的行车制动系统最小设计压力	0.6MPa
注：1MPa=1000kPa	

第五章 车辆运行检查及维护保养

5.1.日常维护项目

1. 24V 低压铅酸蓄电池固定；

2. 膨胀水箱的冷却液液位；

3. 风挡玻璃洗涤液液位；

4. 转向助力油罐油位；

5. 空压机空滤；

6. 检查轮胎气压，查看轮胎损伤和轮胎螺母紧固情况；

7. 检查气路管道有无漏气现象、水路管道有无漏液现象；

8. 指示器（包括仪表、指示灯）的功能是否正常；

9. 检查行驶状态和制动性。

10. 检查所有高压电器舱的仓门已锁紧，从而保证行驶安全。

11. 检查动力电池安装及线缆连接;

12. 检查动力电池周围的灰尘，定期清除；

13. 检查电池舱的密封情况，看是否有大的破损情况。

14. 当气温在 0℃及以下，运营车辆收车后应尽快充电，以防止电池温度过低后充电时间延长，影响运营。

⚠注意
经过检查，缺少的液量要进行补足。如发现不是正常消耗，应查明原因，如管接头结合处等的密封性、排放口盖和注入口盖的密封性及紧固情况等。 严禁混合使用两种或多种不同品牌、类型冷却液。

5.2.新车走合

为了使客车保持最好的性能，具有较高的效率，保证持久的使用寿命，请您切记在新车走合期内，不能让电动机以最大输出功率工作。走合期间要谨慎驾驶，随时注意车辆是否有异常现象。新车走合里程规定为 2500 公里。

1. 新车走合前的准备工作

(1)清洗汽车，检查各部位的螺栓及螺母连接及紧固情况。

(2)检查后桥、电动空压机、转向器的润滑油量以及制动贮液罐和助力转向油壶内的液面高度是否符合规定，检查各管路接头有无渗透现象。

(3)检查制动系统、传动系统以及转向机构的工作是否正常。

(4)检查电器设备、灯光仪表的工作是否正常。

(5)检查驱动桥、转向器等处的润滑油的油面高度，不足时应及时添加，并检查各部位有无泄漏现象。

(6)检查蓄电池电液液面。

(7)检查轮胎气压是否达到要求。

2. 走合期间的维护

(1)应在平坦良好的路面上行驶。

(2)初驶阶段，应检查后桥、传动轴、制动鼓、电池、电容、逆变器等处的温度，应注意感觉底盘有无异响，发现问题应立即停驶，待查明原因，排除故障后方可继续行驶。

(3)应特别注意电池温度。

(4)载重限制：250km 内应空载行驶，250km 后严禁超载。

(5)应经常检查电容箱、电池固定螺栓、轮胎螺母、车厢和悬架的固定螺栓是否紧固，检查转向、制动工作是否正常，检查其自由转动量。

3. 走合后的维护

(1)更换动力转向液压系统的液压油和油罐滤芯。

(2)检查转向机构连接部分有无松弛和损坏。

(3)紧固前后悬架系统螺栓螺母（满载时进行）。

(4)按规定力矩检查底盘和传动部分的各处连接。

(5)检查转向机构的液压系统各部件安装紧固情况。

(6)按保修服务管理手册进行润滑和维护。

(7)检查整车各部有无漏油、漏水、漏气现象。

5.3.驾驶前日常检查

5.3.1.日常检查

为了预防事故和保证行车安全，请您在出车前、行车中、收车后必须亲自对车辆进行仔细检查，绝不可省略。并在良好平坦的路面上行驶。

5.3.2.检查前注意事项

1.应将车辆停放在平坦的地面上。

2. 钥匙开关应处于“OFF”位置上。

3. 驻车弹簧制动器作用有效。

5.3.3.冷机检查项目

1. 检查前一天所发现的异常之处。

2. 检查驾驶员座椅，将驾驶员座椅调整到适合本人的最佳位置，保证行车安全。

3. 检查各类镜面，保证视线清晰。

4. 检查挡风玻璃冲洗液储量，按需添加。

5. 检查车门的锁止情况。

6. 检查转向系统各螺栓螺母的紧固情况。

7. 检查悬架系统各螺栓螺母的连接坚固情况，周围是否有松动的脏物、锈皮或磨损物。

8. 检查减振器是否有泄露和损坏现象。

9. 检查制动操纵系统的连接、紧固情况及有无干涉现象。

10. 检查制动管路是否有漏气现象，并在储气筒有气的状态下排除储气筒中的水。

11. 检查轮胎气压及轮面花纹深度，看胎面有无割伤、裂纹和不均匀磨损现象，并清除挂在胎面、花纹上的异物。

12. 检查动力转向器的油平面。

13. 检查蓄电池的电解液液面高度和浓度是否符合标准。

14. 检查线束与其它部件摩擦是否有损坏情况和搭铁。

15. 检查各润滑点的润滑状况，应及时加注。

5.3.4.起动检查

1. 钥匙达到 ON 档，检查水温表、SOC 电量表、驻车制动灯、充电指示灯、气压过低报警灯等仪表和指示灯的工作情况。

2. 检查喇叭、挡风玻璃刮水器。

(1) 按下喇叭按钮确认发音是否正常；

(2) 先清洁挡风玻璃，再喷出洗涤液，检查洗涤液喷到玻璃上是否正常；

(3) 确认刮水器在每个档位上都工作正常；

3. 检查制动踏板，确定反应时间和效能是否正常。

(1) 轻踏制动踏板，检查其自由行程是否为 7～9°；

(2) 制动踏板踩到底应无发涩现象；

(3) 放松踏板时应同时有排气声音；

4. 灯光检查，接通各灯开关，检查各灯是否正常点亮。

5. 方向盘自由转动量和松动检查。

(1) 在前轮保持直线行驶方向的情况下，将方向盘轻轻左右转动，检查自由行程；

(2) 将方向盘沿轴向和径向摇动，确认是否有松动；

6. 如果有力大或跑偏等现象，应立即停车检查，待排除故障后再行车。

7. 试运行停车后，环绕车辆周围，检查是否有漏油、漏水、漏气现象发生。

5.3.5.车辆使用中的注意事项

1. 严禁在报警灯亮、报警蜂鸣叫时起步和行驶。

2. 严禁水温超过 80℃起步和行驶。

3. 严禁动力电池电量过低或温度过高时起步和行驶。

4. 点火开关在断开位置时，车辆不得行驶，因为部分电气线路未接通，危及行车安全。

5. 确保制动系统工作正常，否则制动失效会引起行车失控，造成人身伤亡和机件损坏。

6. 在湿滑路面，避免使驱动轮长时间突转。否则，会在差速器齿轮上产生应力，损坏后桥。

7. 行车时，也要经常检查转向系统工作情况。如有故障，应立即在安全区域停车检修。

⚠注意
在检查过程中，如发现异常现象，请及时到亚星客车特约维修部进行调整修理。

5.4.车辆运行后定期检查

5.4.1.每运行一周的驾驶前、后检查

1. 检查轮胎气压、轮胎状况及轮胎螺母的紧固情况。

2. 出车应检查轮胎的充气气压，查看轮胎是否存在机械损伤，同时应认真检查轮胎螺母的紧固情况。紧固顺序按交叉对称顺序。

3. 检查洗涤液的存量。

4. 将车停在平坦路面上，查看雨刮水壶，若洗涤液较少，请添加。

5. 检查驱动桥、转向系统及整车的油、气管路是否有泄露现象。

5.4.2.每运行两周的驾驶前、后检查

1. 动力转向油检查

将车停在平坦路面上，打开检修口，检查动力转向液。第一次加油或换油时，先将油加满油罐，将钥匙打开 START 档后，电动转向油泵短时间低速运转驱动油泵进油，使油迅速充满整个转向系统；在加油过程中会吸进一些空气，因此必须多次转动方向盘至两极限位置，使气泡排出，这样打方向盘时会轻松很多。动力转向油不足时及时添加至油罐油面标记处。

⚠注意
超过四天不起动车时，需要将蓄电池的负极断开。

2. 电瓶仓的保养

在有使用融雪剂地区，鉴于融雪剂的高腐蚀性对电器元件的危害，请用户及时对电瓶仓时行保养，清洗电瓶仓。

检查电瓶电量，如有亏电及时充电（切勿对结冰的蓄电池充电）。

更换电瓶时，切忌接反，否则会损坏车辆用电设备。

3. 保险片的更换

在使用过程中，若保险片熔断，必须更换带有亚星标识且和原车规格相同的保险片，不得随意改变保险片容量或跨接保险。

5.5.电器维护保养注意事项

5.5.1.维护保养前注意事项

1.为了安全起见，在对高压仓部件或驱动电机进行维修、维护、保养前必须进行以下三个操作，方可进行作业操作：

2.关闭钥匙开关，取下钥匙，由作业人员随身保管；

3.切断 24V 电源总开关（手动电源总开关）；

4.拔掉电池箱体和高压配电箱上的高压维护开关（详见 5.5.5 节）。

5.若仅对低压电器进行维修作业且不需行车时应把档位开关打到空档 N，然后可按一般燃油车方法进行；若仅对机械设备进行维修作业应在关闭钥匙开关和 24V 电源开关状态下进行。

6.当进行维修作业需要对高压元件进行拆卸时请与我司联系或由专业高压电工断开高压回路后进行。

7.在清洗车辆时，请避开高压元件，严禁用水直接冲洗高压元件。

8.进行任何焊接操作之前，请断开 24V 电源并拔掉整车控制器和电机控制器的低压插件，否则可能导致电脑板损坏。

9.需要长时间停车时，车轮处打好三角块。

5.5.2.仪表维护

1. 仪表日常检查维护

日常驾驶车辆时，要查看仪表上电是否正常，仪表界面显示是否正常以及符号片显示是否正常；要保持仪表清洁，确认各指针表和显示区无污物遮挡清晰可辨。

2. 仪表背面接口定义

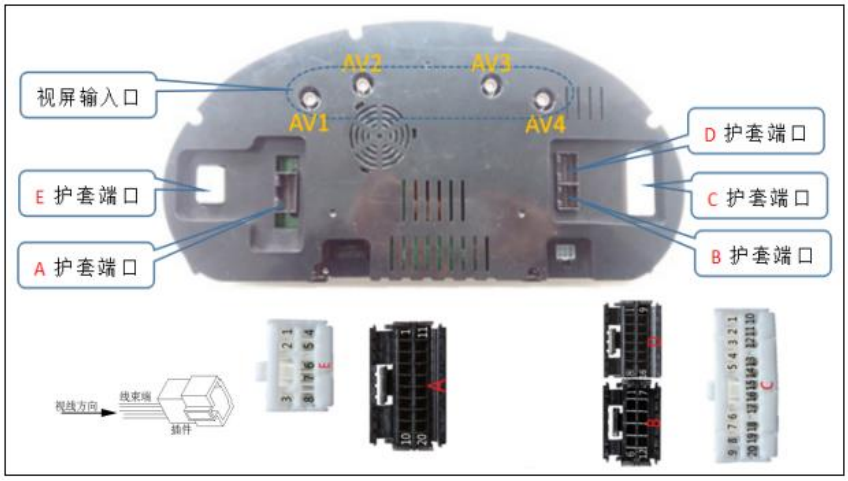

图 193 仪表背面接口示意图一

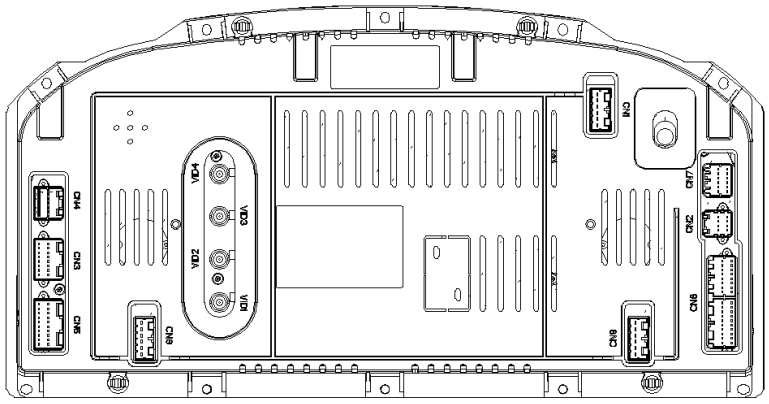

图 194 仪表背面接口示意图二

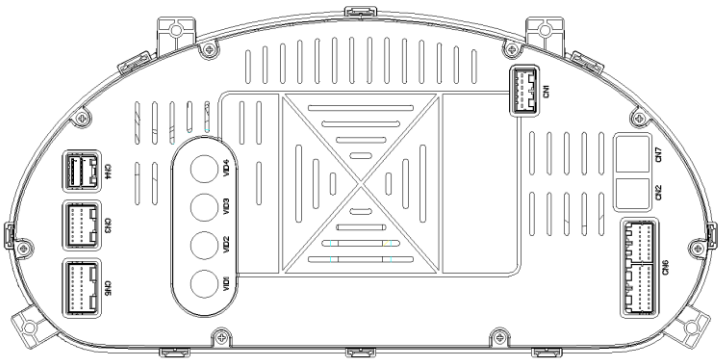

图 195 仪表背面接口示意图三

3. CAN 总线仪表自诊断功能

CAN 总线仪表通过显示屏下方文字栏对故障进行自诊断显示：

（1）对总线设备进行监测，如整车控制器或动力 CAN 线异常时，文字提示如：“总线通讯异常”；

（2）当输出口短路时，文字提示如“某某电器短路”；

（3）当有重要报警信号出现时，文字提示如“气压低”；

常见故障排查

序号	故障现象	检测方法
1	仪表报 CAN 通讯故障、显示屏显示的数据不正常	1. 检查仪表和设备连接的 CAN 线是否正常； 2. 测量 CAN 线之间的终端电阻是否为 60 欧姆； 3. 测量 CAN 线对地电压是否正常； 4. 以上检查全部正常则是仪表坏。
2	仪表显示屏黑屏	1. 检查仪表的常电和钥匙 ON 档电是否正常； 2. 仪表供电正常，断开车辆手动总电源重启仪表看是否黑屏； 3. 以上检查全部正常仪表仍然黑屏则是仪表故障。
3	打开某路开关时无反应，如打开左转向开关时左转向指示符号片无反应	1. 进入仪表诊断界面找到左转向输入开关，打开左转向开关时对应的圆圈应该显示“绿点”不显示则说明输入开关坏或者连线断； 2. 开关输入和连线全部正常，仪表开关诊断口无绿点，则是仪表故障。
4	仪表指示符号片不亮	1. 仪表上的指示灯亮和灭是根据开关或报文信号来定的，即有信号输入，对应的指示灯会亮，首先根据接口定义检查输入信号是否正常； 2. 输入正常，指示灯不亮则是仪表上的指示片损坏，需更换仪表。
5	电机转速表、车速表故障（车辆行驶时指针无反应）	车速信号来自 CAN 线上整车控制器发出电机转速报文，如果仪表中的电机转速表正常，车速指针不动则仪表的车速表头坏，转速报文正常，转速表不动则需要更换仪表

序号	故障现象	检测方法
6	前桥气压表或后桥气压表指示不正常或无变化	参照接口定义，测量气压传感器输入值（电阻或电压），无变化则是传感器坏，需更换传感器，如果变化值正常则是模块或仪表损坏，先更换对应模块，若问题仍存在，则更换仪表。
7	SOC 指针无反应	SOC 指针指示和显示屏上的 SOC 比分比数字同步，数字指示正常，指针不正常的话则是指针表故障，全部不正常的话则是报文信号有误，请检查 SOC 报文信息；
8	低压电池指针表	1. 检查仪表供电及钥匙档供电是否正常； 2. 仪表工作供电正常，指针指示不正常则是电压指针表故障。

5.5.3.高压电器维护保养注意事项

1.动力锂电池属于高压直流电源，维护动力锂电池时，具有很大的危险性，必须由专业维修人员操作；

2.高压电器件维修时，必须等断电 5min 后进行，必须拔掉高压检修开关；

3.维修时选择戴绝缘手套操作，使用金属工具时，必须用绝缘胶布完全防护好工具把手的一端，防止工具成为短路导体发生危险；

4.如果对动力锂电池进行更换，首先要断开电池箱与整个回路的连接并处理好裸露端子的绝缘防护；

5.定期检查高压设备内的防水和通风设备，确保舱内无积水，通风口通风顺畅；

6.动力电池维护保养应按照实车配置电池厂家提供手册进行，或联系售后服务。

警告

●车辆所有橙色线为高压线束，不可随意触碰或切割；

●非专业维护人员禁止触碰或拆装高压电器（与橙色线束相连的部件），禁止无关人员打开高压电器舱；

●在进行一般维修作业时应严格防止高压线束的绝缘层破损漏电；

5.5.4.高压维护要求

1.高压电路的维护必须由持高压电工证的合格电工执行，并严格遵守电工安全操作规程进行（电工证说明：车辆运营所在国家/地区发放的特种作业操作证，电工作业类，低压运行维修证）。

2. 在高压系统进行维护前必须按规定的方法切断高压手动维护开关（拔出高压维修保险），并且等待 5 分钟以上方可操作。高压系统：电机及其控制器、高压配电箱、电动液压助力转向泵、电动空压机、电空调、动力电池等高压器件。

3. 对高压电源进行检查维修时，必须佩戴绝缘手套和绝缘鞋、使用绝缘工具，在任何情况下不能同时接触动力电池的正负极。

4. 绝缘检测所需工具：1000V 兆欧表、800V 万用表、1000A 钳表、绝缘工具、绝缘手套等。检测仪器需要确认工作良好方可使用，避免仪器内部问题导致高压事故。

5.5.5.高压手动维护开关（MSD）

1. 手动维护开关是一种用于手动切断高压线路，起到安全保护功能的橙色电器元件（见手动维护开关示意图）。

2. 相关人员在对车辆进行检修作业前，需先断开手动维护开关，检修作业完成后，需确保手动维护开关安装到位。



图 196 高压盒示意图



图 197 手动维护开关示意图

3. 拆卸维护开关的步骤

(1) 步骤一：如下图 1（拆卸维护开关步骤示意图①）所示，用左手拇指向下按压 A 箭头标记的卡扣位置，同时用右手拇指沿着 B 箭头所示的方向掰开维护开关的拉手至下图 2 中所示的角度。

(2) 步骤二：如下图 2（拆卸维护开关步骤示意图②）所示，继续用左手拇指向下按压 A 箭头标记的位置,同时用右手拇指沿着 B 箭头所示的方向继续掰开维护开关的拉手至下图 3（拆卸维护开关步骤示意图③）中所示的角度，即拉手与维护开关成 90 度夹角。

(3) 步骤三：如下图 4（拆卸维护开关步骤示意图④）所示，用右手握住维护开关上盖的拉手，沿着 A 箭头所示的方向轻轻拉出上盖，完成维护开关的拆卸。

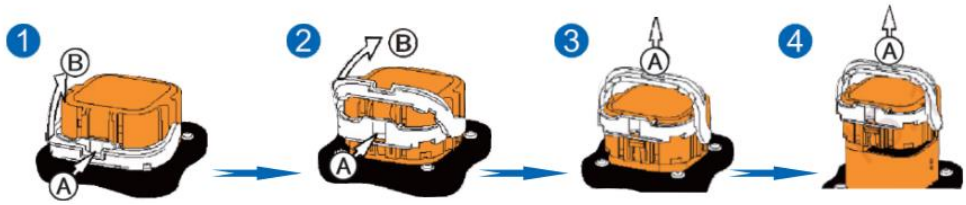

图 198 拆卸维护开关步骤示意图

4. 安装维护开关的步骤

(1) 如图 1（安装维护开关步骤示意图①）所示，用右手握住维护开关上盖的拉手，使拉手与维护开关成 90 度夹角，沿着 A 箭头所示的方向将上盖轻轻插入底座。

(2) 如图 2（安装维护开关步骤示意图②）所示，使用左右手的拇指沿着 B 箭头所示的方向缓慢推动维护开关的拉手，直到听见“咔嚓”声后停 止，如图 3（安装维护开关步骤示意图③）所示，此时维护开关安装到位。

(3) 如图 4（安装维护开关步骤示意图④）所示，用右手握住维护开关的上盖沿着 A 箭头所示的方向拉拨，以此确认维护开关的上盖是否安装到位。

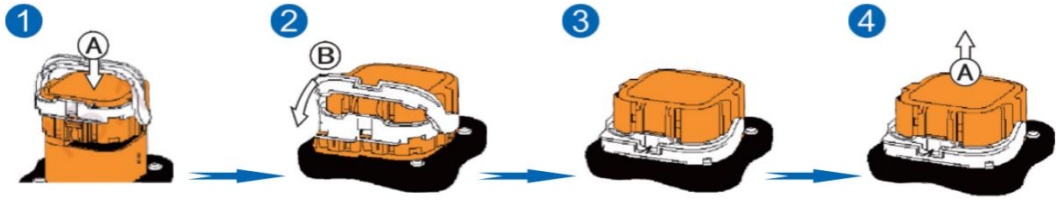

图 199 安装维护开关步骤示意图

5.6.动力电池维护保养

5.6.1.使用注意事项

1. 远离热源、火源, 避免阳光长时间直射，关注电池温度及散热。

2. 禁止长时间将电池放在水中。

3. 定期清洁电池箱体表面灰尘。

5.6.2.维护与检查

1. 在操作和维修过程中，请不要佩戴金银首饰盒手表等金属饰品。

2. 维修保养时，请使用绝缘、专业工具，穿戴绝缘手套和绝缘鞋。

3. 严禁操作人员未穿戴保护装备的徒手操作。

4. 维修作业结束后请及时清理工具和物料，不要将金属物品放在电池的内部或顶部。

5. 对系统线缆进行连接和拆卸作业前，请确保断开了所有高压和低压开关。

6. 禁止擅自解剖电池或电池组, 以免发生危险，如需维修请联系电池厂家或亚星维修人员。

7.动力电池维修安装需按照以下步骤进行：①电池箱安装 ②电池间高压线束安装 ③电池箱体间低压线束安装 ④ 电池箱体间加热线束安装 ⑤ MSD 安装

8.某些电池考虑等电位的，需确保等电位编织带线束牢固可靠。

9.当电池之间线束连接采用紧固螺栓法时。拆开接线处防护盖板后，需带上绝缘手套采用扭力扳手进行紧固操作，扭力值设置在 20NM～25NM。确保端子孔位与连接器孔位对准，确保高压端子与连接器间无杂质，螺栓不能拧偏。

10.如果电池电极采用快速接插件的方式,检查快插件锁止装置是否扣上。

11.检查线束安装固定是否可靠，固定点间距 300mm～400mm。远离热源和易磨损区域。

12.检查电池标准箱的密封性,发现密封性问题的电池箱应立即联系售后维护处理。

13.灰尘清理:散热片灰尘过多影响散热；动力连接处灰尘过多可能引起绝缘偏低；用干布或鸡毛掸去尘,保持干燥、干净。

14.检查报警信息，如有电池报警，及时反馈给亚星售后或电池厂家。

5.6.3.存放要求

1.**动力电池存放关注项和存放时间须满足下表的通用要求**。

关注项目	具体要求
环境要求	室内通风、清洁、遮阳避雨
电池存放间距要求	间距≥1 米
电池远离热源距离要求	间距≥3 米
远离易爆物	不允许与易爆物放在同一房间内
警示标示	在电池存放区应有高压、易燃易爆警示标示
消防装备	在电池存放区域应有消防沙、消防栓、绝缘手套、防毒面具等灭火装置
存储温度	-35～65℃
湿度要求	≤85%
存储电量要求	40%≤SOC≤80%

2.动力电池存储注意事项

(1)电池存储前需确定电池箱体上方的保护盖板安装紧固,无破损。检查电池箱的正、负极接线柱是否已经用高压绝缘套或者其它绝缘材料进行包裹,确保无金属部分裸露在外面,以避免造成短路。

(2)电池不得倒置或卧放,避免受机械冲击或重压。电池存在应有专门的工装夹具，统一放置在具有温湿度和烟雾探测的环境中

(3)电池存放的最佳 SOC 区间：40%～60%之间存放。长期搁置的电池需每三个月进行一次电池保养（保养具体操作参照电池使用说明书）。

(4)久放电池首次使用时，为激活电池系统至少做一次电池保养，已恢复电池的最佳性能。

5.6.4.特别说明

1.动力电池部分的保养和维护，以实车安装电池厂家提供保养手册为准，本说明书内容参考执行。

2.如果动力电池的质保期限到期，应按照国家相关电池回收标准执行，不应再继续使用。

警告
●严禁任何时候用双手同时触摸电池箱体的正负极柱。 ●严禁未断电插拔高压插件及外置保险、MSD 等。 ●严禁对电池进行挤压、刺穿、燃烧等行为。 ●在清洗车辆时,请避开高压元件,严禁用水直接冲洗高压元件。

5.6.5.常见电池系统故障

内 容	原因分析	处理措施
充电故障	未采用欧标充电	请充电机按通讯协议执行
	充电回路漏电	检查充电枪和充电插座上的正极/负极与接地之间的绝缘电阻是否正常（要求>3MΩ）
BMS 故障	BMS 系统各种故障	联系我司指定售后服务处
电池欠压报警	电量过低或单体电池故障	充电或联系我司指定售后服务处
电池高温报警	冷却系统失效或电池内部发热	检查散热系统或联系电池厂家服务
电池压差报警	电池单体电压离散	均衡处理或联系电池厂家服务
电池放电过流报警	放电电流过大	避免急加速行驶

5.7.集成式控制器的使用与维护

5.7.1.安全注意事项

1. 禁止整车控制器、驱动电机及集成式控制器等插接件进行带电插拔，会导致电控系统硬件损坏。

2. 整车焊接作业时，必须对整车控制器、驱动电机及五合一控制器等低压线束插接件采取防护措施，避免周边线束灼伤。

3. 禁止电机控制器未经预充回路直接高压上电，会导致电机控制器电容损坏。

4. 禁止未经许可及专业培训打开整机壳体、更换部件、改装部件、更改电驱动系统外围电气线路、使用非原厂备件等。

5. 电控系统产品的维护必须由具有资质的专业人员完成，客户负责确保所有操作人员都接受过专业培训，佩戴防护护具，以确保人身安全。

6. 电控系统产品的醒目位置贴有高压安全警示标志，在对产品进行操作前请仔细阅读并确保操作过程中遵守安全规范。

7. 高压安全警告标示如下图所示：



图 200 高压安全警告标识

危险

切勿自行拆解或修理本产品，若发现壳体损坏或产品故障，请联系客服。

应使用推荐的固定点来吊装或固定本产品。

在对本产品进行调试或安装时，切勿改变电机和电机控制器的任何零件。对电机和电机控制器壳体施加外部载荷。

本产品运行时可能处于高温状态，可能造成严重烫伤或其它伤害。

切勿在产品运行中或刚刚停机后接触其表面，电机控制器会产生高电压，可能导致触电伤亡。

安装、拆卸产品前，请确保高压电源已关闭或未连接，辅助电池（12V/24V 电池）已关闭或未连接。

本产品必须由有资格及被授权的人员按照车辆标准和工业惯例来安装。即使产品没有连接高压电源，在操作产品时也要进行绝缘保护。

本产品拆卸维护前要等待 5 分钟以上时间，以确保内部电容完全放电，避免电容放电造成人员伤害。

切忌在阴雨天气，大雾，冰霜，沙尘天气等恶劣天气拆卸系统。

违规操作和不按规范使用可能导致产品损坏或人员伤害。

5.7.2.集成式控制及驱动电机维护项目

1. 集成式控制器维护项目

序号	维护内容	技术要求	工具	操作规范	保养周期
1	外观	整机完整、无磕碰及损坏等迹象	目测	目测整机是否完整、是否存在磕碰及损坏等迹象。若有损坏，影响性能时需进行更换。	每 5 千公里
		整机高低压线束连接处干燥、无灰尘，无过热变色等迹象	毛刷及吸尘器目测	使用毛刷或者吸尘器进行表面清洁，清除表面灰层、杂质及异物等 目测高压线束连接处是否有过热变色等迹象，若有，联系专业厂家进行技术判断	每 5 千公里
		排气阀周边无异物堆积及杂质	毛刷及吸尘器	使用毛刷或者吸尘器进行表面清洁，清除表面灰层、杂质及异物等	每 5 千公里
2	安装	电机控制器本体与车架安装紧固牢靠，紧固件扭矩值满足整车厂设计要求	扭矩板手与套筒/六方组合套件	配合相应工具，按照整车厂设计要求进行复查并调整及紧固	每 2 万公里
		橡胶垫无老化、开裂及压溃等迹象	目测	目测及用手触摸感觉减震垫无老化、开裂及压溃等迹象。	每 2 万公里

2. 驱动电机维护项目

序号	维护内容	技术要求	工具	操作规范	保养周期
1	外观	整机完整、无磕碰及损坏等迹象	目测	目测整机是否完整、是否存在磕碰及损坏等迹象。	每 5 千公里
		整机高低压线束连接处干燥、无灰尘 排气阀周边无异物堆积及杂质	毛刷及吸尘器	使用毛刷或者吸尘器进行表面清洁，清除表面灰层、杂质及异物等	每 5 千公里
2	安装	电机壳体与安装板螺栓安装扭矩	扭矩扳手与套筒/外六方组合套件	配合相应工具，按照既定扭矩要求进行复查并调整及紧固	每 2 万公里

序号	维护内容	技术要求	工具	操作规范	保养周期
		电机悬置板无断裂、开焊等迹象	目测	目测悬置安装板是否有断裂、开焊等迹象。若有需更换悬置安装板。	每 2 万公里
		减震垫无老化、开裂、压溃及橡胶剥离等迹象	目测	目测及用手触摸感觉减震垫无老化、开裂、压溃及橡胶剥离等迹象。	每 2 万公里
		a) 电机法兰盘与传动轴法兰盘螺栓安装紧固、无缺失。紧固件扭矩值满足整车厂设计要求 b) 静态下，电机轴输出法兰与传动轴法兰无轴向位移	目测及手感知识别	a) 目测及配合相应工具，按照既定扭矩要求进行复查并紧固 b) 目测及手感知识别, 静态下，握住电机轴输出法兰，往复施力给传动轴法兰，探测轴向是否出现位移	每 2 万公里
		电机悬置减震垫用螺栓无断裂且扭矩需满足整车厂设计要求	扭矩板手与套筒/六方组合套件	配合相应工具，按照整车厂设计要求进行复查并调整及紧固	每 2 万公里
		电机轴与传动轴间综合夹角符合整车设计要求 注：电机轴承为密封免维护设计，无需进行维护	目测及激光对中仪	配合相应工具，按照整车厂设计要求进行复查并调整及紧固	每 2 万公里

3. 系统高压线缆维护项目

序号	维护内容	技术要求	工具	操作规范	保养周期
1	外观	线束完整、外绝缘层无破皮、损伤、开裂、老化等迹象	目测	目测线束是否完整、是否存在破皮、损伤、开裂等迹象，特别需要注意检查转弯处和过线槽部位	每 5 千公里

序号	维护内容	技术要求	工具	操作规范	保养周期
		线束周边空气流通，易于散热。周边不能有尖刺/尖锐物体、干燥、无灰尘	目测、毛刷及吸尘器	目测并使用毛刷或者吸尘器进行表面清洁，清除表面灰层、杂质及异物等	每 5 千公里
2	安装	线束弯曲半径需大于等于 8 倍直径	目测及卷尺	目测及实际卷尺检查线束弯曲半径是否大于等于 8 倍直径	每 5 千公里
		线束需绑扎牢靠不松旷。整车布线、紧固需满足整车厂设计要求	目测及用手感知	目测及用手感知检查线束捆绑情况。例如，核实绑扎带是否丢失、固定卡子松动、固定胶脱落、线体保护套丢失等	每 5 千公里
		线束不能与低压线束、气路、油路、水路等捆绑	目测	目测线束是否与低压线束、气路、油路、水路等捆绑，除非保证之间具有有效隔离措施	每 5 千公里
		线束接线片无松动且紧固牢靠	扭矩板手与套筒/六方组合套件	配合相应工具，按照既定扭矩要求进行复查并紧固	每 2 万公里
		线束锁紧器无松动且紧固牢靠。锁紧器底座扭矩：15Nm;锁紧器罩盖扭矩：12Nm	Lapp(缆普)—61610000—61610013	配合相应工具，按照既定扭矩要求进行复查并紧固	每 2 万公里
		线束闷盖/盖板无松动且紧固牢靠	扭矩板手与套筒/六方组合套件	配合相应工具，按照既定扭矩要求进行复查并紧固	每 2 万公里

5.7.3.产品环境及冷却要求

1. **电驱动产品对环境及冷却要求**

项 目	要 求	备 注
工作时冷却液温度	-40℃至 80℃	最高温度≤80℃

项 目	要 求	备 注
工作时环境温度	-40℃至 85℃	全性能下不高于 75℃
储存温度	-40℃至 85℃	
冷却液规格	50％乙二醇+50％纯水	以实际运行环境温度为准选择合适规格。

警告

●冷却液灌装之前应冲洗冷却回路（去除杂质），冷却液不应对系统和管道产生腐蚀。

●乙二醇必须符合相对应的标准（轻型 ASTM D3306 III 型或重型 ASTM D6210 III 型）。

●冷却液成分为,常规为 50％乙二醇+50％纯水，并确保适当的防腐蚀性。

●严禁混合使用两种或多种不同类型的冷却液。

●补充冷却液时应补充相同品牌规格的冷却液（禁止补充蒸馏水或自来水）。

●冷却系统故障时会导致驱动系统温度过高，驱动系统将进入降功率保护状态，温度严重超出限制时会启动停机保护。

2. 冷却系统维护项目

序号	维护内容	技术要求	工具	操作规范	保养周期
1	外观	整车所有冷却水管接合/转接位无漏液痕迹、水管无破裂老化。折弯处无影响冷却液正常流动的折弯、变形	目测	目测整车所有冷却水管接合/转接位无漏液痕迹、水管无破裂，尤其是对胶管折弯处无折死弯、变形和破损	每 5 千公里
		膨胀水箱冷却液液面不低于下线标志位	目测	目测膨胀水箱内冷却液位	每 3 千公里
		散热器散热栅无异物堵塞	目测	目测检查散热栅是否有异物堵塞	每 5 千公里
2	安装	冷却水泵、散热扇组件及膨胀水箱安装紧固件安装牢靠，扭矩值满足整车厂设计要求	目测及扭矩板手和套筒/外六方组件	配合相应工具，按照整车厂设计要求进行复查并紧固	每 2 万公里
3	冷却液成分检查	使用正确成分的冷却液，可根据当地气候条件选择防冻液的冰点，一般以比当地最低气温低 5～10℃为宜。）	目测与防冻液检测仪	检查冷却液成分是否适宜	每 5 千公里

序号	维护内容	技术要求	工具	操作规范	保养周期
4	更换冷却液	每 5 万公里或每 2 年更换一次冷却液（以先到者为准）	冷却液	1、检查整体管路有无泄漏； 2、打开水箱放水阀或下水管放水阀将冷却液排尽； 3、保持水泵运转，不断加注清水，直至流出的水流干净透明，排尽清水； 4、保持水泵运转，从膨胀水箱加液口加注规定型号冷却液，液位至 min-max 之间； 5、车辆运行一段时间后若水位下降需补加冷却液。	每 5 万公里/每两年

⚠注意
新能源辅机系统的厂家规定不尽相同，具体参数按各厂家规定执行。

5.7.4.系统常见故障处理

故障名称	发生故障的可能原因	故障排查方法
集成制器内高压配电保险熔断	高压回路断路	1、检查动力电池的正负极与外壳或车身地的绝缘电阻；
		2、检查高压配电箱的输入/输出正负极与壳体的绝缘电阻；
		3、检查电机控制器的正负极与车身地的绝缘电阻；
		4、以上各电阻大于 2MΩ 为正常。
油门故障	油门线束出现短路	正常油门踏板有两路 5V 电源和接地，检查底盘线束和油门插件，查找短路点
	油门线束出现断路	正常油门踏板有两路 5V 电源和接地，检查底盘线束和油门插件，查找断路点
刹车踏板故障	电子刹车线束信号线断开或者漏接	整理线束
	电子刹车踏板故障	更换电子刹车踏板
电机及其控制器温度高故障	冷却液位太低	检查水路有无泄漏的地方，如果有泄漏则进行维修；加注冷却液至要求液面高度

故障名称	发生故障的可能原因	故障排查方法
	冷却风扇异常	检查冷却风扇供电和控制信号是否正常，若正常则更换冷却风扇，若异常检查风扇控制继电器和整车控制器风扇控制输出是否正常
	水泵故障	检查水泵供电是否正常，若正常则更换水泵，若异常检查风扇控制继电器和整车控制器风扇控制输出是否正常
	水道堵塞以致水循环不通畅或水路内部有空气	检查水道是否存在异物或者给水管排空
	电机及其控制器内部温度检测异常	以上均排除后电机及其控制器温度仍未下降，请与我司指定售后服务处联系
档位故障	操作不当引起	重新按换档规范操作。
	档位面板故障	更换档位面板
	线束出现短路或者断路	整理线束，避免出现短路或者断路
电机控制器通讯故障	CAN 线束出现短路或者断路	整理线束，避免出现短路或者断路
	电机控制器的搭铁线虚接或漏接	将电机控制器的搭铁线可靠搭铁
	电机控制器内部 CAN 电路异常	联系我司指定售后服务处
集成式控制器 CAN 通讯故障	CAN 线束出现短路或者断路	整理线束，避免出现短路或者断路
	配电箱内部控制器 CAN 电路异常	联系我司指定售后服务处
	辅机控制器 CAN 线束出现短路或者断路	整理线束，避免出现短路或者断路
	辅机控制器内部 CAN 电路异常	更换辅机控制器
后仓门未关故障	后仓门开关检测传感器线束故障	整理线束，避免线束故障
	后仓门开关故障	更换后仓门开关

5.8.电动液压助力转向泵的使用与维护

⚠注意
进行本项操作时必须确保严格按照高压维护要求执行。

5.8.1.维护保养说明

1. 首保：2500 公里，首保请更换液压油，并对油罐、管路系统进行清洗，排出赃杂物换油时对油

罐，滤油器和管路进行仔细清洗，并检查固定螺丝。

2.汽车每行驶 2 万公里应更换液压油，并清洗管路保持系统清洁。

5.8.2.定期检查

序号	内容	检查项	问题及处理
1	助力转向电机油泵	检查外观	总成外部是否有灰尘，处理方法：清除灰尘
2		助力转向接插件	端子损坏、松动、变形、存在拉电弧迹象，并及时更换接插件
3		检查液压油	液压油面是否在规定刻度范围内； 定期更换滤芯（过滤精度 25μm）； 定期检查油罐更换油芯； 油罐必须密封好，不得渗入赃物
4		助力转向电机油泵油路检测	高压油管损坏，有渗漏，处理方法：紧固油管接头或更换油管
5		助力转向电机油泵支架	支架螺栓松动、损坏、变形、断裂、结构损坏，处理方法：紧固支架螺丝或更换支架
6	助力转向电机控制器	检查外观	用风枪、毛刷对控制器外表，尤其散热器、电线插头进行清洁（不要拔出电线插头），保证电控装置清洁干燥。
7			检查电线插头的固定情况，确保插件无松动、污物等。

⚠注意

●转向泵工作时,人员不得触摸；

●不要将方向盘在极限位置上停留 10s 以上，否则转向泵的温度会急剧上升，容易造成泵的损坏。

●待电动转向泵正常运行后再打方向；

●急转弯、原地转向等将方向盘打到极限， 应马上把方向盘回退一些（不会影响转弯角度），避免方向盘极限位置打死；

●冬季注意更换低温抗磨液压油（-10 度以下建议使用冬季液压油（昆仑天润 TFIII 汽车自动传动液；壳牌施倍力 S3 ATFIII MD3 自动变速箱油以及 Castrol DEXRON-III 自动变速箱油）；

⚠注意

●不得使用机油做为液力传动介质。

●在转向泵发出异响时，应检查油罐油位是否过低，滤网是否堵塞和油路管接头是否松动。

●新能源辅机系统的厂家规定不尽相同，具体参数按各厂家规定执行。

5.8.3.常见故障及排除

故障类型	产生原因	排除方法
泵不吸油或吸油不足	油液粘度大	使用推荐粘度的油液
	油箱内油液液面太低	加油至规定油面高度
	吸油管漏气	查出漏气处并予以修复
	从泵轴颈回转密封处吸入空气	拆开泵检查回转密封圈有无损坏并予以更
	电机反转	检查接线，修正转向
压力达不到要求	稳流阀卡在全开启状态，流量内泄，造	拆开阀，清洗阀芯和阀孔，排除赃物
	稳流阀磨损，间隙增大	更换相应磨损件
	调压阀泄露，造成压力不足	清洗压力阀座和阀芯
	阻尼孔被堵塞	清洗排除脏污赃物
	流量旁通路拐压，压力上不来	检查油路是否被拐，检查压力油是否从执
噪音	滤芯器堵塞，吸油不畅	检查滤芯器是否堵塞，若堵塞则予以修复
	液压进油系统有气体进入	检查进油连接部分是否有漏气处，若有则
	进出油管太细太长，弯头太多	加粗、缩短油管，减少弯头
	电机与控制器参数不匹配	核实控制器参数
转向沉重	油罐内油量少	加注至标准油面
	安全阀堵死	拆阀清洗，排除赃物
	流量阀卡死	拆阀清洗，排除赃物

5.9.电动空压机的使用与维护

⚠注意

进行本项操作时必须确保严格按照高压维护要求执行，本车型标配无油活塞式电动空压机，选配有油式电动活塞空压机。

5.9.1.无油电动活塞式空压机维护保养说明

序号	项 目	检测内容	检查维护时间					
		行驶里程	每天	5000公里	1.5万公里	3万公里	12万公里	24万公里
		时间周期		每1个月	每3个月	每6个月	每2年	每4年
1	噪音	检查	√					
2	振动	检查	√					
3	固定螺栓	检测		√				
4	气、电接头	检查紧固		√				
5	清理外置空滤	清理			√			
6	清理散热器灰尘	清理			√			
7	清理风机叶片	清理			√			
8	更换外置空滤	清理或更换				√		
9	进气软管	出现裂缝、硬化时更换					√	
10	电机绝缘	检查绝缘电阻					√	
11	减震垫	检查，如有严重磨损更换						√
12	密封部件	检查，如有严重磨损更换						√

说明	1、里程数是按照每日行驶 200 公里计算，如实际每日行驶里程与此误差较大，请根据保养里程数计算相应的保养周期。2、“ √ ”项为需要进行维护保养项目。

5.9.2.有油式空压机保养要求

1. 首保：20000 公里或 3 个月，首保请更换润滑油和空滤芯。

2. 清洁空滤：每 2000 公里或每周。

3. 更换空滤：每 20000 公里或 3 个月。

4. 高级保养：每 90000 公里或 12 个月，清洗温控阀组件，更换润滑油、空滤及相应密封件，并认真检查联轴器垫，必要时更换。

5.注意：以上维修周期、里程或时间以先到为准，如在灰尘较大或高温环境下工作，压缩机的维修周期应缩短。

5.9.3.定期检查

请保持机器的清洁，若机器表面灰尘较多，可用合适的管子卡接在排气口，打开排气阀来吹掉设备表面的灰尘；

空气滤清器清洗或更换周期：外置一级空滤器滤芯一般情况下要求每 3 个月进行一次检查、清理，6～9 个月视进气质量及污损程度及时进行更换；内置的二级空滤器滤芯要求每 6 个月进行一次检查、清理，12～18 个月视进气质量及污损程度及时进行更换（滤芯为例行保养零件）。用户亦可视机器工作环境的不同酌情增减保养的频次；

每 3 个月可自主检查主要零部件的紧固和气管路的密封情况，确认重要螺栓、螺母无松动，保证各气管路连接的密封性和设备运行时的平稳性。

每 3 个月检查阀芯动作是否灵活,停机时关闭是否迅速,以及关闭时阀片处密封是否良好。

⚠注意

●空气压缩机允许使用环境温度范围为-30℃～65℃之间。

●检查各部分螺栓或螺母有无松动现象。

●管路是否正常。

●电线及电器开关是否合乎规定，接线是否正确。

●电源的电压是否正确。

5.9.4.常见故障及排除

故障现象	造成原因	排除方法
空压机不工作	空压机高温报警	整车下电，等待空压机冷却后再上电
电机不能运行或堵转	①线路故障或电压太低 ②电机故障 ③主机咬死	①确保输入电源电压满足电机工作电压要求； ②检查电机内部接线和电源输入侧接线是否存在开路或接触不良现象； ③电机故障则需要及时更换。
电机转动缓慢	①电机电压偏低 ②电机受阻 ③带载启动	①检查电机电源电压； ②查看设备内部有无阻碍运作的螺丝等异物； ③打开空压机排气阀，保证空载。
主机咬死	运动部件损坏或被异物卡住	检查曲轴、轴承、连杆、活塞、活塞环等，必要时更换。
振动剧烈或有异常响声	①连接部件松动 ②异物落入主机内 ③偏心轮轴弯曲 ④运动部件磨损严重	①检查各紧固件是否松动； ②查看设备内部有无异物； ③偏心轮轴弯曲以及部件磨损严重时视情况进行更换。
气压不足或排气量减少	①电机转动缓慢 ②空气滤清器堵塞 ③安全阀漏气 ④排气管路泄漏 ⑤密封圈破损 ⑥阀片损坏或卡住 ⑦活塞环、气缸磨损或损坏	①电机转动缓慢请查看上面第二项； ②查看空滤滤芯是否清洁完整，必要时进行清洗或更换； ③在管路连接部位用泡沫水查看安全阀、排气管路的密封情况，适当调整或者进行更换； ④检查阀片、活塞环、气缸等部件，视情况进行清理或更换。
电磁阀漏气	① 24V 电源插件未正常连接。 ②电磁阀线圈损坏。	①将 24V 低压插件重新插好，保证连接可靠； ②更换电磁阀线圈。
散热风扇不转	①叶片损坏 ②防护网变形卡住叶片 ② 风扇马达故障 ④低压控制板故障	①检查控制板插件及接线是否接触良好； ②风扇叶片损坏或者马达故障时可进行更换； ③护网变形可修复或者更换。

5.9.5.例行保养和易损件清单

序号	名称	序号	名称
01	一级空气滤芯	07	电磁阀
02	二级空气滤芯	08	安全阀
03	进气阀片	09	散热风扇
04	排气阀片	10	低压控制器总成
05	○形圈	11	减振垫
06	活塞环		

注：a、01～02 号为空压机例行保养件，03～11 号为空压机易损件；

b、打气效率明显降低时，可检查 03～06 号易损件，视实际情况进行清洁或者更换；

5.10.底盘维护保养

5.10.1.底盘日常维护保养

首次维护项目列表如下：

序号	总成类别	作业部位	保养动作
1	冷却系统	水泵、冷却水箱	清理
2	转向系统	转向系统运动部件	检查
3	电器盒及保险	中央电器盒及后封闭电器盒	检查
4	底盘线束	线束及导线	检查
5	盘式前桥	横拉杆、转向节臂、制动器	紧固
6	盘式前桥	轮毂油封	检查
7	盘式前桥	转向横拉杆总成	检查
8	盘式后桥	桥包加油塞、放油塞、轮毂加油塞、主锥油封	检查、清理
9	盘式后桥	半轴、制动器、气室紧固螺栓、螺母	紧固
10	盘式后桥	轮毂轴承	检测
11	盘式后桥	轮毂油封	检查
12	盘式后桥	主减速器总成（油液）	更换
13	鼓式后桥	半轴、制动器紧固螺栓、螺母	紧固
14	鼓式后桥	桥包加油塞、放油塞、轮毂加油塞、主锥油封	检查、清理
15	鼓式后桥	轮毂轴承	检测
16	鼓式后桥	轮毂油封	检查
17	鼓式后桥	主减速器总成（油液）	更换
18	后桥油润滑鼓式	桥包加油塞、放油塞、轮毂加油塞、主锥油封	检查、清理
19	后桥油润滑鼓式	轮毂油封	检查
20	后桥油润滑鼓式	半轴、制动器紧固螺栓、螺母	紧固
21	后桥油润滑鼓式	制动气室	检查
22	后桥油润滑鼓式	主减速器总成和轮边总成（油液）	更换

5.10.2.车辆油液更换标准及关键总成参数

1. 润滑脂加注点一览表

每次总成解体，在重新装配时，应对各轴承、衬套等进行润滑。

序号	润滑部位	加注量(g)	润滑脂规格	间隔周期(KM)
1	驱动电机输出端油封	均匀涂抹	CAM2高温油脂	每36个月
2	集中润滑油罐	约460g	基压锂基脂NLJI0#、00#、000#	集中润滑监控器缺油报警时补充

在有相对运动的各零件摩擦表面涂以润滑脂；

2. 油液信息一览表

序号	名称	油品规格型号	加注量	保养周期
1	后桥主减速器	GL-5	约10L	自行加注润滑油：每3～～5万公里；
		HD-R03（汉德专用）	约10L	汉德车桥若使用汉德专用齿轮油，更换周期为10万公里；
2	转向系统	ATFIII	约6L	每12个月
3	电动空压机	APICH-4及以上（有油式）	约2.5L	每12个月
4	防冻液(电机和水暖)	普通地区：-25#重负荷冷却液 寒冷地区：-45#重负荷冷却液	42L	每24个月
5	防冻液(动力电池)	普通地区：-25#重负荷冷却液 寒冷地区：-45#重负荷冷却液	27L	每24个月

3. 后桥用油参数

使用地区	温度范围	润滑油牌号
热带地区	≥30℃	GL-585W/140-GB 13895-1992
常温地区	-15℃～30℃	GL-585W/90-GB 13895-1992
寒冷地区	-30℃～15℃	GL-580W/90-GB 13895-1992
高寒地区	≤-30℃	GL-575W/90-GB 13895-1992

a. 对于鼓式制动器：制动鼓磨损量≤2mm,摩擦片磨损量≤7mm

⚠注意
从踩下制动踏板到最不利的制动气室响应时间 0.60S。

5.10.3.轮胎使用保养

1. 轮胎更换

车辆经过一定时间的行驶，轮胎均有不同程度的磨损。为合理使用，延长轮胎寿命，在车辆每行驶 8000 公里到 10000 公里时，应按下图所示对轮胎进行换位。如果发现轮胎过早磨损、不规则磨损的迹象，应马上检查四轮定位状况，做动平衡及轮胎换位。

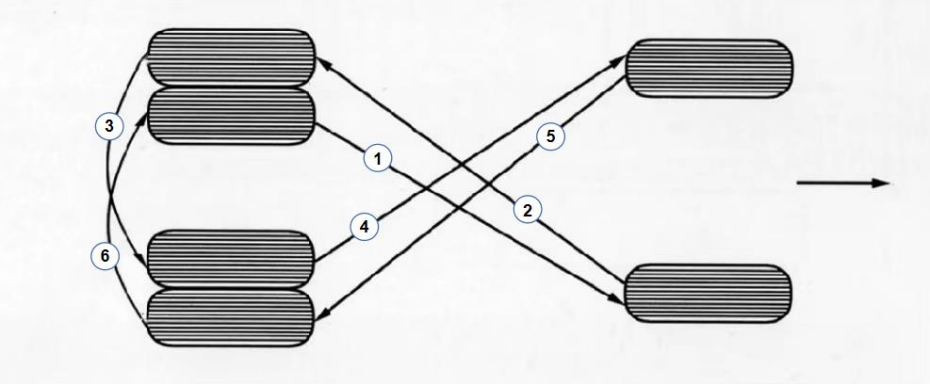

图 201 轮胎更换示意图

轮胎气压较正常低 20%就会增加电量消耗约 8%；当气压高时消耗量变低，但轮胎寿命却变短，附着力降低，故要正确选择轮胎和胎压。

2. 轮胎使用注意事项

(1)轮胎所充气压必须符合标准所规定的气压，不要在低气压或高气压下行驶，轮胎气压务必在轮胎冷却状态下检查，不允许在热胎下调整气压。

(2)在高速公路行驶时，每 2 小时应休息 15 分钟。

(3)轮胎充气时，应慢速充气，缓慢提高气压，以避免因气压突然升高而导致损坏轮胎及轮辋。

(4)轮胎气压每周检查一次，装有防滑链的轮胎应对称装用，不用时应立即拆掉。

(5)轮胎磨损标志是轮胎的安全使用标志，当胎面磨损达到磨损标志时，应停止使用。

(6)拆卸前，轮胎内的空气要排净，以保证拆卸人员的安全。

(7)为确保行车安全，所有车轮都不允许装翻新的轮胎。

(8)行驶前必须检查轮胎的气压、磨损状态、外部伤痕、有无钉子等，一旦发现有外部损伤应立即停用。

(9)跨越路面障碍物、坑时必须减速。

(10)更换轮胎时必须同时更新新气门嘴，带有内胎的轮胎在更换轮胎时也要同时更换新内胎。

(11)每行驶 12000km-15000km 进行一次换位并检测平衡。

⚠注意

详细参见保修服务管理手册。

5.10.4.各里程段维护保养内容

1. 车辆每 4000km 的维护

(1) 检查加速和减速性能状况。

(2) 检查润滑油的清洁度和剩余量。

(3) 检查制动踏板的自由行程。

(4) 检查转向机及液压管路是否漏油。

(5) 清洁前后桥及车轮总成。

(6) 检查转向系统中各种螺母的紧固情况。

(7) 检查方向盘转动情况，是否松驰或颤动。

(8) 检查转向器紧固状况。

(9) 检查制动器及驻车弹簧制动效能。

(10) 检查制动软硬管是否漏气、损坏及连接固定情况。

(11) 检查传动轴十字轴凸缘连接螺栓的紧固情况。

(12) 检查半轴螺栓的紧固情况。

(13) 检查轮胎气压和车轮螺栓螺母拧紧力矩。

(14) 检查轮胎是否异常磨损。

(15) 按润滑油表对各辆的各润滑点进行润滑。

(16) 检查蓄电池各接头的紧固情况和添加蒸馏水。

(17) 检查车架联接螺栓紧固情况。

(18) 检查前独立悬架车轮定位情况，避免轮胎磨损。

(19) 新能源部分的维护和保养见新能源使用手册。

2. 车辆每 8000km 的维护

同 4000km 的维护项目。

3. 车辆每 12000km 的维护（含 8000km 的维护）

(1) 清洁润滑并调整轮毂轴承。

(2) 检查转向传动装置花键啮合副的磨损情况。

(3) 检查转向机连接部分有无松驰颤动和损坏。

(4) 检查液压系统各部件安装紧固情况。

(5) 检查传动轴十字轴轴承有无松弛，检查突缘螺母的紧固情况。

(6)检查并调整前束。

(7)对车辆的各润滑点进行润滑。

(8)新能源部分的维护和保养见新能源使用手册。

4. 车辆每 24000km 的维护（含 12000km 的维护）

(1)更换动力转向液压系统的液压油和油罐滤芯。

(2)检查转向节连接部位是否松动。

(3)检查制动鼓和制动蹄摩擦片的磨损和损坏情况。

(4)检查电动空气压缩机的工作是否正常。

5. 车辆每 36000km 的维护（含 24000km 的维护）

检查筒式减振器的工作情况。

6. 车辆每 48000km 的维护（含 36000km 的维护）

(1)紧固各类螺栓（包括悬置）。

(2)检查转向机齿轮间隙及其内部是否泄漏。

(3)检查横直拉杆和节臂连接部分有无磨损和损坏。

(4)检查转向节、转向节臂及其二者的连接部门有无裂纹。

(5)检查转向节与前轴的间隙。

(6)检查前轮的定位情况。

(7)检查前轮的转向角度。

(8)检查制动阀门和其它阀门的密封效能。

(9)检查车轮制动气室是否工作正常及损坏。

(10)检查前后钢板销套的磨损情况，必要时更换。

(11)检查车架及车身的焊缝和构件有无裂纹，连接螺栓和铆钉有无松动。

7. 车辆每 80000km 的维护（含 48000km 的维护）

(1)拆检后桥主减速器总成，并进行调整，对半轴套管进行磁力探伤。

(2)拆检转向横、直拉杆各接头，更换转向系统各球头销，对转向节进行磁力探伤。

(3)检查减振器的作用，对衰退失效的，应送修理厂更换。

(4)拆检前后钢板弹簧，更换前、后钢板弹簧销套。

(5)拆检驻车、行车制动器。

⚠注意

详细参见保修服务管理手册（如与保修手册不同，以亚星保修服务管理手册为准）。

5.11.车身维护保养

5.11.1.车辆维护注意事项

1. 车身应经常保持清洁，每日行驶后应及时清洁，不得用器具铲刮，以免刮伤油漆，引起蒙皮损坏。

2. 门、窗密封胶条应保持完整，有损坏时应及时更换。

3. 禁止用热水、碱水、煤油和其它有损于油漆的油液清洗车身油漆部分。

4. 定期检查车身骨架、车架及其连接部位，发现异常应及时到我司指定的维修服务站检查修复。

5. 经常检查车内部件的紧固件，及时紧固。

6. 经常检查乘客门的状况，若有异常应及时检查调整。

7. 经常检查客车的灯光状况，若损坏及时更换。

8. 定期检查安全顶窗和应急门，保持其应急功能完好。

9. 定期的专业养护可使您的客车保值，延长使用寿命。对车身表面和油漆损伤进行定期养护也是获得保修权的前提条件之一。

10. 车身存在油脂等污渍时,需对车辆进行清洗。

⚠注意
● 购买养护用品时必须优先选择环保产品。 ● 未用完的养护用品请与生活垃圾分开放置。 ● 保护车身面漆和保持良好的驾驶视野。

⚠警告
●滥用养护用品可能对健康有害。 ●养护用品必须安全存放，尤其不能让儿童接触，否则会有中毒的危险。

5.11.2.洗车

经常洗车是保护客车免受有害环境影响的最好方法，清洗客车的时间间隔取决于车辆使用频度、道路状况、存放场所、季节、气候条件、环境等。

客车外表附着的昆虫体、鸟粪、树脂、路面灰尘和工业灰尘、沥青、煤烟粒、化学盐和其他腐蚀性沉积物在客车油漆上附着越久，其损害作用就越大，高温，强烈的阳光照射，会更加加剧侵蚀作用，因此，车辆外表有污渍时应及时清洗。

警告
●在冬季清洗客车时:制动系统内潮湿或结冰会降低制动效果,发生危险。 ●在任何时候清洗车辆必须避免制动管路进水,同时必须对电池、电器控制器件等机件采取防水措施。

1.车辆清洁前准备工作

(1)车辆停稳,切换为空挡(N 挡) ,拉上驻车制动器手柄.

警告
不按以上要求操作,可能导致车辆自动滑行或启动时突然行驶发生车辆碰撞、人员伤亡事故。

(2)车辆依次关闭点火开关、电源总开关、电源手柄开关。

警告
● 不规范断电,可能造成车辆损坏或人员伤害。 ● 不断电,洗车时可能会对人身及财产带来安全风险。

(3)关闭门窗

警告
未关闭门窗,会导致液体进车内,造成电器件故障。

(4)务必保管好钥匙,避免造成车辆损坏或人员伤亡事故。

2.车辆外部清洁

(1) 车外清洗注意事项

a. 当车辆外部有明显尘土、鸟粪、树脂等污渍时， 需对车辆进行清洗。保护车身面漆和保持良好的驾驶视野。

b. 清洁大灯等灯具最好使用肥皂水湿洗,用清水冲净,不要用抹布擦拭。

c. 日常清洗客车时,清洗水管不要对准推拉窗活动玻璃边缝、角缝,防止喷出的高压水束渗入车内。

d. 在任何时候清洗车辆必须避免制动管路进水,同时必须对电池电器控制器件等机件洗车时采取防水措施。否则会影响车辆安全,并造成重大人员伤害。

e. 地面出现积水时请及时进行清理,否则可能因积水或冬季结冰使人滑倒,造成人身安全事故。

f. 电池系统、驱动电机、转向电机、电动空压机、电除霜器、集成式控制器、充电机、充电插座、高压电缆、连接件等高压部件及后高压仓门清洁时,请用气枪清洁。

警告

●禁止使用圆束喷嘴或旋转式喷嘴式的水枪对车辆进行清洗，否则会对车辆造成伤害。

●禁止使用高压水枪对进气格栅、行李仓门接缝处、润滑部位进行冲洗。

●禁止直接用高压水冲洗散热器及冷却风扇叶片。

●在冬季清洗车辆时，如果用水管冲洗车辆，严禁喷出的水束对准车锁、车门、仓门接缝处，否则会有冻住的风险。

●禁止使用粗糙物品擦拭车身表面，防止划伤漆膜。

●严禁使用热水冲洗结冰玻璃，会有导致玻璃炸裂危险。

●严禁用湿抹布、湿拖把或水、酒精等有机溶剂冲洗高压部件，否则会因此造成车辆工作异常、绝缘失效，带来触电或起火风险。

(2) 车锁清洁

及时清理锁体上面的冰雪和污物。否则可能会使锁芯被堵塞或锈蚀，导致车锁无法打开。

(3) 铝合金车轮清洁

为了长期保持铝合金车轮外表美观，需用专用铝合金保护清洁剂对其清洗养护手工清洗。如果未及时洗掉车轮上的化学盐和制动磨屑，则铝合金材质会受侵蚀，影响车轮美观及车轮强度。

(4) 底部保护层清洁

车辆裙边蒙皮内侧喷的阻尼胶、底盘保护腊可以减少车体振动、石击、腐蚀对车辆寿命的影响，在清洗车辆时应注意保护。

注意

由于车辆在使用过程中无法避免保护层受损伤，所以建议您不定期对车辆底部和底盘的保护层进行检查，特别是寒冷季节开始前和结束后，需要进行修复。

3. 用车辆内部清洁

(1) 地板革清洁

先对地板革表面进行清扫，避免砂粒等硬物摩擦地板布表面，然后用半干的拖布清理。

警告

●不要用丙酮、环乙酮、浓碱水等有机溶剂擦洗，防止地板革脱胶、焊接部位开裂及边沿翘曲，较严重污垢部位可用中性清洁剂或洗涤剂擦拭干净。

●禁止用水冲洗，否则可能会使水从接缝中漆入，破林粘结以及造成地板腐烂、翘曲、异味等现象。

● 注意避免锐器等坚硬物品划伤或磨损地板革。

(2) 安全带清洁

用中性肥皂液(1升水加2勺中性肥皂粉)清洁有污迹的安全带。

警告
●不得拆下安全带进行清洁，安全带卷起时必须是干燥的 ●不得用化学制品清洁安全带；因为这样的清洁剂会损坏安全带的织物,安全带也不得与腐蚀性液体接触。 ●如果发现安全带织物、连接件、锁扣等有损坏,则必须更换。

(3) 皮革清洁

a. 人造革：用湿抹布清洁人造革。如果无法清除污渍,则只允许使用专用的无溶剂塑料清　洁和养护剂清洗。

b. 天然皮革：对天然皮革需要加以特别的关注和养护。

◆ 普通清洁：用略微潮湿的纯棉抹布或羊毛抹布清除皮革表面上的污物。

◆ 较严重的污渍：用中性肥皂液(两食勺中性肥皂粉溶于一升水中)蘸湿把抹布,然后用其清除较严重的污渍。

◆ 对于特殊污斑(如圆珠笔、记号笔、指甲油、乳胶漆、鞋油等)，请用皮革专用的污斑清除剂。

温馨提示:每隔半年用专用的皮革养护剂对皮革养护一次。

注意
● 避免车辆长时间在强烈的阳光下停放,以防止皮革褪色,如果不得不长时间将汽车停放在露天环境时,应遮盖住皮革以防止阳光直射其上。 ● 清洁时要留意,皮革的任何部位都不要被水浸透,也不要让水浸入接缝处的针孔内,否则会损坏皮革。 ● 每两到三个月清洁一次皮革及时除去新的污渍,否则会损坏皮革。 ● 尽快清除圆珠笔、墨水、口红、鞋油等留下的新污渍。 ● 测量座椅间距时,请拆除加装的座套,避免座套影响座椅间距。

(4) 面料清洁

a. 普通清洁

应使用专用的清洁剂或软海绵进行清洁。对于刚洒落座椅上的水质污迹,尽快用吸水性较好的抹布或纸巾清除。

b. 较严重的污渍

用中性的肥皂液把抹布沾湿,然后用其清除污渍,清洁后用柔软的干抹布擦干。

⚠注意
避免尖锐物品划伤面料。

(5) 内饰装饰件清洁

内饰指车内前后围、侧围、顶盖覆盖件、扶手等非织物材料。由于高温高湿环境下,车辆长时间停驶不通风,容易滋生霉菌。因此车辆停驶期间,应每2周打开门窗通风,使车内空气流通循环。若车辆于雨季或夏季湿热天气运行,也应每2-4周清洁维护内饰件表面一次。

清洁时使用白色干净湿抹布清洁后自然晾干,较严重污渍使用清洁剂清洁,并使用白色干净抹布擦拭,否则可能有清洁剂残留。

⚠警告
●电加热器、高压电缆及连接件等高压部件清洁时,可用气枪清洁,严禁用水、酒精等有机溶剂冲洗上述高压部件,严禁用湿抹布、湿拖把或酒精等有机溶剂擦拭上述高压部件,否则会因此造成车辆工作异常、绝缘尖处,带来触电或起火风险。 ●仪表台电器件区域严禁用水清洗,清理时请用气枪处理,否则会因此造成电器设备工作异常带来着火风险。

(6) 驾驶及踏板区城清洁

清洁并使用车用吸尘设备清理干净驾驶及踏板区域，防止杂物阻码驾驶员对踏板的操作。

⚠警告
驾驶及踏板区域有杂物,会阻碍驾驶员对踏板的操作,造成重大交通危险事故。

5.12.车辆停放

5.12.1.停放要求

1. 停放注意事项

车辆不建议长期停放，长期停放会改变整车零件特性，降低车辆安全性能，缩短车辆使用寿命，增加用车成本。

(1)车辆停放时应关闭所有电器开关、关闭点火钥匙、关闭总电源开关、关闭低压手柄开关，停放时严禁拔掉手动维护开关；

(2)车辆停放时不应带故障停放，有故障时应排除后停放；

(3)车辆停放时应锁好乘客门、车窗及仓门，气囊悬挂车辆还应加装气囊保护垫块；

(4)车辆停放时停车场应有视频监控及维护人员定期巡视；

2. 车辆停放时，要求按照以下表格找那个内容维护保养。

停放要求 1（停放时间 T ≤15 天）

项目	要求	备注
停运时间	T ≤15 天	连续停放时间
环境温度	-35℃～55℃	
电池仓温度	-25℃～45℃	
湿度范围	＜85%RH	
远离热源	≥3 米	
远离易燃物	≥3 米	
低压断电	断开低压电源总开关	
电池容量剩余	30%≤SOC≤80%	
消防装备	车内装有消防器	

停放要求 2（15 天＜停放时间 T ≤90 天）

项目	要求	备注
停运时间	15 天＜T ≤90 天	连续停放时间
环境温度	-35℃～55℃	
电池仓温度	-25℃～45℃	
湿度范围	5%RH～75%RH	
远离热源	≥3 米	
远离易燃物	≥3 米	
低压断电	断开低压电源总开关	
电池容量剩余	40%≤SOC≤70%	建议 60%左右
铅酸蓄电池	每月拆下进行一次补充充电	新旧蓄电池不允许混装使用
消防装备	车内装有消防器	

停放要求 3（停放时间 T＞90 天）

项目	要求	备注
停运时间	T＞90 天	每 90 天启动车辆对高压储能元件进行充放电维护一次
环境要求	遮阳避雨	遮雨棚，避免直晒
环境温度	-35℃～65℃	环境温度
电池仓温度	-35℃～65℃	

项目	要求	备注
湿度范围	5%RH～75%RH	
远离热源	≥3 米	
远离易燃物	≥3 米	
低压断电	断开低压电源总开关	
电池容量剩余	40%≤SOC≤70%	建议 55%左右
铅酸蓄电池	每月拆下进行一次补充充电	新旧蓄电池不允许混装使用
消防装备	车内装有消防器	

5.12.2.车辆停放场地要求

1. 车辆停放场地要求远离加油站、加气站、热源、积水、腐蚀物和易燃易爆物品等；

2. 车辆停放场地应具备良好的排水功能，避免积水淹没动力电池的现象发生；

3. 车辆停放间距左右应不小于 1 米，前后通道不小于 5 米；

4. 车辆停放场地应有足够的消防设施，有专门消防通道方便消防车出入，通道宽度应不小于 4.0 米；

5. 报废车辆停放时 SOC 应不超过 30%；

6. 车辆停放最优温度 5℃～30℃，湿度 5%RH～75%RH；

7. 车辆停放时间超过 1 年，重新启运前需联系售后服务人员或电池厂家对动力电池进行检测，确定电池状态后再使用。

5.12.3.检查项目

1. 长期（停放时间超过 30 天）停放车辆检查

车辆长期停放的停运期间需按下表进行相关检查。

停放初期检查内容

检查项目	检查内容	检查周期
仪表	启动车辆，目测检查车辆仪表，应无故障报警，无故障灯亮，无故障码显示。出现异常及时联系售后服务人员检查处理。	月度
蓄电池	24V 低压铅酸蓄电池无亏电，仪表无亏电符号显示。	月度
动力电池	检查动力电池 SOC 值，应符合存储要求，仪表无电池故障报警。当 SOC 过低时应补电处理，有故障时联系服务人员。	月度
水、油、气路	目测各管路密封情况 ，应无漏水、漏油、漏气情况。	月度

检查项目	检查内容	检查周期
各门类	打开乘客门通风 0.5 小时，车内干燥无异味。各仓门开关良好。	月度
整车	车辆行驶 5km 以上（安装气囊护垫的要先拆处后动车），使各运动配合面均匀润滑。检查各低压电器件工作正常，检查驱动系统及辅控部件工作正常。	月度

⚠警告
不按要求进行检查，将存在安全风险，影响后期车辆正常运行，易发生故障。

2. 长期停放后重新启运时的检查项目

车辆长期停放（停放时间超过 30 天）后，重新启运时电器部分应按照下表进行检查。

车辆重新启运检查内容

检查项目	检查内容
仪表	1、检查仪表是否显示严重故障，如电池、电机、绝缘等故障。 2、仪表显示 SOC 数值，若低于 30%需要及时充电。
动力电池舱检查	1、要求对各电池箱体上的端子重新紧固，若采用快速插件，确认锁扣到位，无松动。 2、有无动力电池电极裸露；检查每个电极连接线束护套是否覆盖住电极，如果没有，手动移动护套覆盖住电极，确保没有裸露的电极。 3、绝缘电阻检查，采用兆欧表（1000V 档）对动力电池输出总正、总负测量对车身地（或金属壳体）的绝缘电阻，绝缘阻值≥3 兆欧判断绝缘正常； 4、灰尘清理：散热片灰尘过多影响散热；动力连接处灰尘过多可能引起绝缘偏低；用干布或鸡毛掸去尘，保持干燥、干净。 5、查看电池箱各固定点，受力是否有变形损坏现象； 6、查看电池仓内是否有积水，若有积水请排查漏水源头，及时密封。
集成式控制器及其驱动电机	1、五合一控制器内的各高压线缆接线牢固，无松动，绝缘层无破损，接线端口的 PG 插件是否拧紧（要求拧到螺纹底部）；防护盖上的螺栓是否拧紧（要求拧到螺纹底部）

检查项目	检查内容
	2、驱动电机固定螺栓紧固，无松动，或用手用力推控制器，控制器应牢固可靠，不摇晃。 3、冷却管路接头连接可靠，冷却液无渗漏。 4、五合一控制器和驱动电机外壳接地线连接牢靠，无松动。 5、车辆进入驱动模式后，电机及控制器温度有所上升，行驶一段时间后无高温报警。
电动液压助力转向泵	1、检查方向盘转动情况，是否松动或颤动，转向是否正常； 2、检查电动液压油泵工作是否正常，接线是否松动。 3、泵和电机连接牢靠，螺栓无松动。与底盘连接的减震垫螺栓无松动，减震垫完好无破损。高压线缆及外壳接地线连接牢靠，无松动。 4、各液压管路接头连接牢靠，无渗漏，转向油罐的油面在标记线范围。 5、停运时间超过 1 年需更换转向液压油，并对油罐、管路系统进行清洗，排出赃物换油时对油罐、滤油器和管路进行仔细清洗。
电动空压机	1、空压机总成与底盘连接牢靠，螺栓无松动，减震垫完好无破损。高压线缆及外壳接地线连接牢靠，无松动。 2、气压管路头连接牢靠，无漏气。 3、有油式空压机还应检查润滑油，润滑油无明显乳化现象，加注量符合要求。如果停运时间超过 1 年需更换润滑油。
冷却系统	1、散热器总成与底盘连接牢固、完好，散热器表面应清洁无明显异物附着，风扇转动灵活无异响。 2、清除水泵表面尘土 ，水泵固定螺栓牢固无松动。 3、各连接管线连接良好，无破损、碰擦。 4、散热风扇和水泵插接件连接牢靠，线束无磨损。
整车控制器	1、插件接线牢固，安装无松动。 2、清洁壳体表面，保持干燥、干净。
整车线束检查	1、橙色外皮的高压电缆应无破损、捆扎固定牢靠，无碰擦部位。 2、高压器件的外壳接地线螺栓牢固，无松动。 3、高压线缆安装固定卡无松动，固定良好。

3. 特殊说明

动力电池、集成式控制器、驱动电机、电动空压机、电动助力油泵等高压部件保养和维护，以实车

安装厂家提供保养手册为准。

第六章 附录

6.1.汽车底盘常用螺栓螺母扭矩

6.1.1.常用扭矩参数表

序号	名　称	材料	级别	规格或结构	标准值（N•m）	扭矩范围（N•m）
1	前 U 型螺栓	40Cr		M16X1.5	240	200-270
				M18X1.5	260	220-290
				M20X1.5	280	250-300
2	后 U 型螺栓	40Cr		M18X1.5	260	220-290
				M20X1.5	280	250-300
				M22X1.5	330	294-345
3	方向机与支架连接螺栓	40Cr	10.9 级	M14X1.5	180	146-205
				M16X1.5	240	199-270
				M18X1.5	320	287-346
				M20X1.5	430	390-460
				M22X1.5	510	460-560
4	轮胎螺母	标准件		M18X1.5	430	397-457
				M20X1.5	570	540-596
				M22X1.5	600	570-630
				M24X1.5	660	620-700
5	传动轴十字节连接螺栓	标准件		M14X1.5	180	146-205
				M16X1.5	240	199-270
				M18X1.5	320	294-345
6	横直拉杆球销螺母	标准件			180	150-210
7	转向直拉杆球销螺母	标准件			180	150-210
8	离合器压盘紧固螺栓	标准件	8.8 级	M10X1.5	59	49-75
9	飞轮壳紧固螺栓	标准件	8.8 级	M12X1.5	97	73-110

序号	名　　称	材料	级别	规格或结构	标准值（N•m）	扭矩范围（N•m）
		标准件	10.9 级	M10X1.5	75	52-90
10	上下减震器连接螺栓	标准件或自制件		M18X1.5	140	100-180
				M20X1.5	140	
				M22X1.5	140	
				M24X1.5	140	

注意

轮胎螺纹拧紧力矩最大误差不超过扭矩范围规定值的 20%;

对于不同结构的方向机，连接方式不同，扭矩也不同(附：部分动力转向器对应的安装扭矩)。

6.1.2.施必牢螺母扭矩参数表

序号	名称	规格	扭矩范围（N•m）
1	防松螺母	ZG6177.2 M24X2-10F2	800-900
2	防松螺母	ZG6177.2 M22X1.5-10F2	630-670
3	防松螺母	ZG6177.2 M20X1.5-10F2	470-530
4	防松螺母	ZG6177.2 M18X1.5-10F2	320-360
5	防松螺母	ZG6177.2 M16X1.5-10F2	230-260
6	防松螺母	ZG6177.2 M14X1.5-10F2	160-180
7	防松螺母	ZG6177.2 M12X1.25-10F2	95-110
8	防松螺母	ZG6177.1 M10-10F2	50-60
9	加厚防松螺母	ZG-F-097 M24X2-10F2	800-900
10	加厚防松螺母	ZG-F-132 M22X1.5-10F2	630-670

6.1.3.没有特殊说明的螺栓螺母扭矩

对没有特殊说明的螺栓螺母扭矩参照《QC/T518-1999　汽车用螺纹紧固件拧紧扭矩规范》执行。

(1) 对没有特殊说明的 T 型卡箍、吉美卡箍、螺栓拧紧扭矩为 5N•m;

(2) 对于不能在螺母端检查拧紧力矩，可以检测螺栓端拧紧力矩，标准力矩为螺母端力矩上浮 20%；

(3) 常用紧固件扭矩见下表：

螺纹直径 mm	螺距 mm	等级	拧紧扭矩（N·m）		
			标准值	最大值	最小值
6	1	8.8	9	12	6
8	1.25	8.8	23	26	16
10	1.5	8.8	59	75	37
12	1.75	8.8	95	111	73
12	1.5	8.8	97	113	75
12	1.25	8.8	99	115	78
14	2	8.8	160	185	122
14	1.5	8.8	180	205	146
16	2	8.8	215	245	182
16	1.5	8.8	240	270	199
18	2.5	8.8	268	298	229
18	1.5	8.8	316	346	287
10	1.5	10.9	74	90	52
12	1.75	10.9	140	156	105
12	1.5	10.9	142	158	106
12	1.25	10.9	145	161	108
14	2	10.9	175	200	141
14	1.5	10.9	210	235	178
16	2	10.9	280	310	200
16	1.5	10.9	305	335	240
18	2.5	10.9	437	467	380
18	1.5	10.9	467	507	397

⚠注意

以上列表内容，为未作特殊说明要求的，检查时以弹垫压平、不损坏、扭力符合装配要求为合格。

6.2.制动器盘式/鼓式参数

盘式制动器				
适配制动器规格	初始制动盘尺寸 直径×厚度 mm（毫米）	制动盘 极限厚度 mm（毫米）	初始制动片厚度 （含背板 mm）	制动片极限厚度 （含背板 mm）
气压 22.5’’	Φ430×45	37	30	12
气压 19.5’’	Φ377×45	37	30	11

鼓式制动器			
序号	适配制动器规格	初始制动鼓内径	制动鼓极限内径 （不大于）
1	Φ360×160	Φ360	Φ363
2	Φ400×180	Φ400	Φ404
3	Φ400×220	Φ400	Φ404
4	Φ410×220	Φ410	Φ414
5	Φ320×160	Φ320	Φ323
6	Φ310×130	Φ310	Φ313

6.3.部分动力转向器对应的安装扭矩

厂家	转向器型号	垂臂大螺母拧紧力矩	转向器安装螺栓紧固力矩 （10.9 级）(N·m)
ZF	ZF8090 955 191	350N·m±10%	400N·m±10%
	ZF8095_957_102	520N·m±10%	520N·m±10%
	ZF8095_957_103	520N·m±10%	
	ZF8098_957_107	700N·m±10%	520N·m±10%
	ZF8098_957_108	700N·m±10%	
	ZF8098_957_112	700N·m±10%	
	ZF8098_957_114	700N·m±10%	
	ZF8098_957_124	700N·m±10%	
	ZF8098_987_110	700N·m±10%	
江门	YZ-ZJ120CY/Z(带垂臂)	550±55N·m	500±50N·m

厂家	转向器型号	垂臂大螺母拧紧力矩	转向器安装螺栓紧固力矩（10.9级）(N·m)
	ZJ120C-113	550±55N·m	
	ZJ120C-108	550±55N·m	
	GX100C-25	520±50N·m	
	GX100D	430±30N·m	
	GX90CZ/Z	375±20N·m	
	ZJ100D-01	520±50N·m	
	GX85C-28	330±30N·m	
	GX100C-122	520±50N·m	
	YZ-ZJ120CY/Z 不含垂臂	550±55N·m	
	GX100D-60-75	425±25N·m	
朝阳	CPS82A(带垂臂)	247±30N·m	390-460N·m
	PS10080	247±30N·m	287-346N·m
	PS10080AF	247±30N·m	287-346N·m
	CPS82F	247±30N·m	390-460N·m
罡阳	GX120BX	500N·m±10%	560±16N·m
	GY120FX	500N·m±10%	
	GY85B（带垂臂 ）	110-130N·m	
	GY85H	110-130N·m	
	GY100B	170-230N·m	
	GY90TA	280-320N·m	

⚠注意
对于不同结构的方向机，连接方式不同，扭矩也不同。
三相线拆卸下来的平垫、弹垫、螺栓，先用手拧紧螺栓，调节
M8 螺栓扭力 25±2N·m
M10 螺栓扭力 30±2N·m

6.4.随车技术文件

交车时随车附带说明书主要有：

1. 集成式控制器使用说明书
2. 驱动电机使用说明书
3. 电动空压机使用说明书
4. 电动助力油泵使用说明书
5. 动力电池使用说明
6. 空调使用说明书
7. 暖风使用说明书
8. 监视器使用说明书
9. 音响使用说明书
10. ABS 防抱死系统使用说明书
11. 空气悬架使用说明书

⚠注意
本使用说明书与附带说明书结合使用，有附带说明书的以说明书为准； 因各车型配置有所差异，所附带说明书会随配置不同增减，具体以实车为准；

6.5. 动力电池溯源

1. 按照国家相关法规要求，亚星客车承担回收废旧动力蓄电池的主体责任，用户不得擅自处置废旧动力电池。当有动力蓄电池报废时，用户请通知亚星客车回收处理，或用户将废旧动力蓄电池送至亚星客车回收服务网点。

2. 亚星客车在全国各地建立有电池回收服务网点，服务网点请登录亚星客车官网查询。

3. 亚星客车将销售产品装配的动力蓄电池的拆解拆卸有害物质信息等信息已经公布，公布查询请登录亚星客车官网查询。

6.6.车辆主要配置参数

型 号 / 主要参数名称	JS6120GHBEV
外形尺寸（长×宽×高)(mm)	12180×2550×3420
不计入车辆外廓尺寸的部件的名称、位置	外后视镜（左右侧围）、外部标示（左右侧围）、雨刮器（前围）、前 LOGO 标志（前围）、流水槽（前围两侧及乘客门上方）、车外应急阀（右侧围）、侧标示灯（左右侧围）、侧转向灯（左右侧围）、门锁（左右侧围）、软质天线（车顶）、倒车辅助装置（后围）、摄像头（前、后围和左右侧围）
总质量(kg)	19500
轴距(mm)	5900
最小转弯直径（m）	22
最小离地间隙（mm）	130
驱动形式	后驱
防抱死系统	EBS
最大爬坡度（%）	≥20%
最高车速(km/h)	80

额定载客(含驾驶员)(人)	(有残疾人位置)29/56/1,(无残疾人位置)29/66/0 option1 有残疾人 25/60/1　无残疾人　25/70/0 option2 有残疾人 34/47/1　无残疾人　34/57/0 option3 有残疾人 30/53/1　无残疾人　30/63/0 option5 有残疾人 29/54/1　无残疾人　29/64/0 option6 有残疾人 36/44/1　无残疾人　36/53/0 option7 有残疾人 32/50/1　无残疾人　32/60/0 option8 有残疾人 31/52/1　无残疾人　31/62/0 option9 有残疾人 31/51/1　无残疾人　31/60/0
前悬/后悬(mm)	2800/3480
接近角/离去角(°)	6/6
钢板弹簧片数(前/后)	-/-
前轮距(mm)	2110
后轮距(mm)	1880
轮胎规格	275/70R22.5
发动机（驱动电机）型号	TZ368XSPE300WH
额定功率/扭矩(kW/N·m)	145/1100
峰值功率/扭矩(kW/N·m)	245/3329

储气筒额定工作压力(kPa)	1000
制动气室响应时间 （s）	≤0.60
备注：以实车配置为准	

4.6.2 Seat belts

A seat belt refers to an assembly used to reduce the degree of injury to a vehicle by restricting the movement of the wearer's body during sudden deceleration or collision. For your safety, please fasten your seat belt before driving every time.

6. Classification of seat belts

The driver's seat of this model is equipped with a three-point seat belt, and the passenger's seat can be optionally equipped with a two-point seat belt. If optional, the relevant requirements in this manual must be followed.

(3) Three-point seat belt



Figur 202 Schematic diagram of three-point seat belt position

It consists of four parts: coiler, webbing, locking tongue, and locking buckle

警告
No other items are allowed to be placed near the seat belt folding box, otherwise it may damage the folding box.

(4) Two point seat belt (optional)

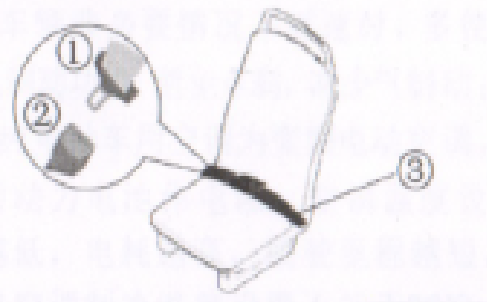

Figure 203 Schematic diagram of two-point seat belt

The two-point seat belt consists of three parts: ① tongue, ② buckle, and ③ webbing.

7. Wear and remove seat belts

(3) Wear a seat belt



Figure 204 Seat Belt Wearing Diagram

a. Pull the lock tongue and slowly and steadily pull out the seat belt, wrapping it around the chest or hip.

危险

●It is strictly prohibited to wrap the webbing around the neck, otherwise in case of emergency braking or collision accidents, it may cause neck injuries, and even result in suffocation and injury to personnel.

● It is strictly prohibited to clip the shoulder strap under the arm, otherwise the seat belt will not be able to provide its protective function. In case of emergency braking or collision accidents, it may even cause more serious injuries to the driver and passengers.

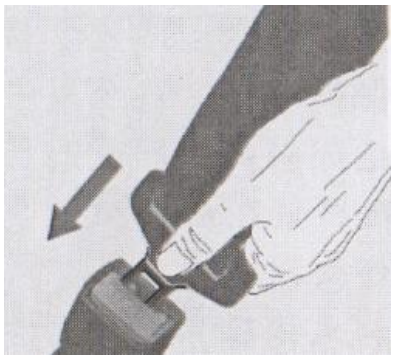

Figure 205 Schematic diagram of locking seat belt operation

b. Insert the locking tongue into the lock buckle belonging to this seat until you hear the sound of engagement.

c. Pull the seat belt to ensure that the locking tongue is securely fastened inside the buckle

危险

● When the lock buckle socket is blocked, clean it immediately, otherwise the safety belt lock tongue

危险

cannot be correctly engaged, causing the safety belt to fail to play its protective function, and even causing more serious injuries to the driver and passengers in the event of a vehicle accident.

- It is strictly prohibited to insert the locking tongue or any other object directly into the buckle without using the webbing to shield the alarm information, otherwise the safety belt will not be able to provide protection.
- If the wearer of the seat belt has a pacemaker implanted, it is strictly prohibited to press the strap onto the heart. Otherwise, in case of emergency braking or collision, tightening the seat belt may compress the pacemaker and cause personal injury or death.
- It is strictly prohibited to place the webbing behind, otherwise the seat belt will not be able to provide protection.
- The hip strap must always be tightly attached to the lowest possible position of the hip, and it is strictly prohibited to wrap it around the abdomen. Otherwise, in case of emergency braking or collision accidents, the user's abdomen may be injured, and even the risk of injury or death may increase.
- Each seat belt is only allowed to be fastened by one person, and it is strictly prohibited for two people to use it, especially not to share one seat belt with children.
- Children under 12 years old or under 1.5 meters tall are not allowed to use three-point seat belts. They can use two-point seat belts under adult supervision and should not be used alone without supervision.
- It is strictly prohibited for the safety belt webbing to loosen, otherwise the safety belt cannot play its protective function, which may cause injury or death to passengers in the event of an accident.

(4) Disengage the seat belt



Figure 206 Schematic diagram of unfastening seat belt operation

c. Press the red button on the seat belt buckle, the locking tongue will pop out, and the seat belt can be disengaged.

d. After using the seat belt, restore it to its natural state.

危险

- When the driver's seat belt webbing fails to retract automatically, it is necessary to manually pull the webbing lightly to retract it. If manual intervention cannot retract it, the accessories should be replaced immediately. Otherwise, the seat belt function will fail, and in the event of emergency braking or collision accidents, the risk of injury to the driver and passengers will increase.
- When the seat belt is not in use, it is strictly prohibited to place the buckle upwards, otherwise it may injure personnel.

8. Precautions for using seat belts

(7) During the process of wearing the seat belt, it should be smooth and in close contact with the person's body, and twisting is strictly prohibited.

(8) Safety belts that have been used or subjected to a strong load in serious accidents must be replaced immediately and must not be used again.

(9) Keep the seat belt clean and dry, and strictly prohibit the use of corrosive cleaning agents to clean the seat belt.

(10) The seat belt should be free from wear, tear, or other forms of damage. Otherwise, the seat belt should be replaced immediately and its use is prohibited.

(11) When the seat belt cannot be properly extended or used, it is not allowed to sit in.

(12) It is strictly prohibited to place other items on the seat belt accessories, otherwise it may damage the seat belt.

危险

- It is strictly prohibited to wrap the seat belt around sharp, hard or fragile objects, otherwise it may damage the seat belt.
- It is strictly prohibited to disassemble, dismantle or modify the seat belt without authorization, otherwise it may cause the seat belt to fail to perform its protective function, and even lead to more serious injuries or fatalities to passengers in the event of an accident.
- It is strictly prohibited to place any objects between the body and the seat belt (such as undressing clothes, cushions, hot water bottles, etc.), otherwise the seat belt cannot play its protective function, and may even cause more serious injuries to passengers in the event of an accident.

9. Requirements for pregnant women to wear seat belts

(3) Hip seat belts should be positioned as low as possible. And it should not be wrapped around the abdomen. If necessary, push the hip seat belt below the hip joint to prevent abdominal compression.

(4) During each prenatal check-up, you should consult a doctor to see if it is suitable for you to drive a vehicle or wear a seat belt.

危险
●If the seat belt is not worn correctly, it may cause serious injury or even death to pregnant women and fetuses in case of emergency braking or collision.

10. Warning instructions for driver not wearing seat belt

(1) The indicator light for the unfastened seat belt on the combination instrument panel flashes east and emits an alarm sound.

(2) When the passenger seat is equipped with a two-point seat belt, all passengers in the car should wear the seat belt correctly according to the requirements. It is strictly prohibited to drive without wearing a seat belt, otherwise the risk of injury or death will increase in the event of an accident.

(3) It is strictly prohibited to unfasten the seat belt during driving. The safety belt can only be unfastened after the vehicle has come to a complete stop.

6.6.1.Emergency exit

An emergency exit is a passage provided for passengers to safely disembark in case of an emergency. It includes a safety top window and a safety side window, and the safety top window also has natural ventilation and forced ventilation functions.

6.7.Passenger doors and emergency switches

7. Passenger door



Figure 207 Passenger door schematic diagram

The front passenger door is a double leaf electric swing door located at the front of the front wheel of the bus; The middle passenger door is a double leaf electric swing door, located between the two wheels on the right side of the bus; The rear passenger door is a double leaf electric swing door located at the rear of the right rear

wheel of the bus.

8. Front passenger's door opening and closing button or remote control outside the car

The vehicle is equipped with a door opening and closing button located outside the front passenger door and at the lower edge of the front windshield (circled in the figure below), which is used by the driver to operate the door opening and closing from outside the vehicle. Instructions for use are posted near the button, or remote control buttons can be used to operate the door opening and closing, depending on the actual vehicle configuration.



Figure 208 Schematic diagram of the door opening and closing buttons for the front passenger outside the car

9. In-car control and use

After the passenger door mechanism lock is opened, the front and middle doors can be controlled to open and close using the rocker switch with symbols on the dashboard

10. Use of emergency control valves

When in an emergency state or when the air pressure in the door air circuit does not meet the working pressure (less than 0.4 MPa), use the emergency vent valve near the passenger door or rotate the emergency vent valve on the auxiliary instrument panel side, wait for about 6 seconds for exhaust, and then manually open the door.

When an emergency situation occurs (outside the vehicle), open the emergency valve switch cover near the passenger door outside; Rotate the red hand pull switch inside the cover clockwise to manually open the passenger door.

When an emergency situation occurs (inside the car), open the emergency valve switch cover near the inside of the passenger door, rotate the red hand pull switch inside the cover clockwise, and manually open the passenger door. In emergency situations, the emergency valve near the dashboard can be used to release air, and then manually open the passenger door.



Figure 209 Schematic diagram of emergency valve outside the vehicle



Figure 210 Schematic diagram of emergency valve inside passenger door



Figure 211 Schematic diagram of emergency valve on dashboard

危险

- The safety vent valve is only used in the event of a malfunction or emergency in the passenger door.
- Pay attention to checking for air leaks in the air circuit on a daily basis to ensure that the passenger door opens and closes normally.
- When turning the air release switch back to its original position, be careful to prevent personal injury caused by sudden opening or closing of the passenger door due to rapid inflation of the air circuit.
- During the process of opening and closing the passenger door, it is prohibited to stand within the movement area of the door panel.
- It is strictly prohibited to use emergency valves when the passenger door switch function is normal or in non emergency situations.
- When driving, keep the internal and external valves in the reset state, otherwise the passenger door may be damaged during vehicle operation.
- It is strictly prohibited to use the emergency valve to open the door multiple times in a row, otherwise due to insufficient vehicle air pressure. Causing passenger doors to fail to close properly, even resulting in safety accidents and casualties.
- It is strictly prohibited to open the door during vehicle operation, otherwise it may cause safety accidents and even casualties.

11. Common troubleshooting of passenger doors

Serial number	Fault	Reason	Exclusion method
1	The car door automatically opens	Inappropriate position of anti pinch door opening	Adjust the position and parameters of the anti pinch

Serial number	Fault	Reason	Exclusion method
			switch
2	The door leaf shakes when opening and closing the door	The position of the eccentric wheel is not suitable	Adjust the eccentric wheel
3	Door stuck during opening or closing	Leakage of door pump or solenoid valve	Replace parts
4	No response when opening or closing the door	The circuit is not connected Air path blocked or leaking, or air pressure less than 0.4MPa	Please have an electrician repair it Repair the air circuit or inflate it
5	Can it be turned on or off? The function cannot be turned off or on	Control circuit malfunction Electromagnetic valve coil malfunction	Please have an electrician repair it Replace the solenoid valve
6	The speed of opening or closing the door is too fast or too slow	The cylinder speed control joint has not been properly adjusted Poor air flow or insufficient air pressure	Adjust the connector Repair the air circuit or inflate it
7	Anti pinch function failure	Anti pinch switch turned off Door pump rocker arm position error Anti pinch controller malfunction	Turn on the anti pinch switch Adjust the position of the rocker arm Replace the anti pinch controller

12. Auxiliary facilities for boarding and alighting



Figure 212 Schematic diagram of boarding and alighting handrails

The boarding and alighting handrails are mainly used for passengers to grab and hold when boarding and alighting, and are installed on the inside of the passenger door. The location is shown in the above figure.

The surface of the armrest should be kept clean and dry regularly, without any impurities such as oil stains that may affect the gripping effect.

6.8.Driver's protective barrier

3. Guardrail function

Driver protective barriers are isolation facilities used to block passengers from the driver and ensure the safe operation of the driver. They play a protective role in the event of passenger threats, attacks, or steering wheel grabbing by the driver.



Figure 213 Schematic diagram of driver's protective barrier and barrier door lock

4. Operation method of guardrail door lock

(3) Unlock from the outside

从 When opening the enclosure door from the outside, press button  to open the enclosure door.

(4) Internal switch lock

When opening the enclosure door from the inside, press button  to open the enclosure door.

When closing the enclosure door from the inside, press button  to lock the enclosure door.

警告

- When using a raised glass enclosure, the driver must raise the door glass during normal use, and the height after lifting must not be less than 1600mm.
- Surrounding the glass is one of the important facilities for safe driving for drivers, and it is necessary to ensure that the glass is intact and undamaged.
- When the glass is damaged, it needs to be replaced with glass that meets the standards.

6.9.Sunshade Curtain

Sunshades are used to prevent drivers from dazzling and experiencing visual fatigue. There are two forms: manual and electric. Please pay attention to your vehicle configuration.



Figure 214 Schematic diagram of driver's window sunshade



Figure 215 Schematic diagram of front windshield sunshade

3.**Electric operation**: The driver's sunshade is equipped with a toggle switch , which can control the driver's sunshade to descend/ascend to the desired position.

4.**Manual operation:** Pull down the middle of the sunshade to the desired position, release it, and lock the sunshade. If there is a pull rope on the driver's window pillar, pulling the pull rope will cause the sunshade to retract. If there is no pull rope on the driver's window pillar, pull down the sunshade to the limit position, then release it, and the sunshade will rise or directly push up the middle of the sunshade.

6.10.Triangle warning signs and accompanying tools

3. Use and placement of triangular warning signs

(3)When the vehicle malfunctions or for other reasons, it is necessary to stop the vehicle in a position that does not affect normal traffic and remove the triangular warning sign.

(4)The triangular warning sign should be placed in the following way: on general roads, it should be placed 50-100 meters behind the vehicle, and on highways, it should be placed 150 meters away from the rear of the vehicle, with the reflective surface facing towards the direction of the vehicle.

4.Onboard tools

Tools are shipped with the vehicle and should be properly stored after receiving the vehicle. During use, the following points should be noted:

(5)The car jack provided at the factory can only be used for this model according to regulations. It is not allowed to lift other heavier vehicles or other heavy objects. Before returning the car jack to its fixed position, please fully retract the car jack arm, otherwise there is a risk of injury.

(6)After lifting the car, do not start it, otherwise there is a risk of accidents.

(7)If it is necessary to work under the vehicle, be sure to use suitable pads to firmly support the vehicle, otherwise there is a risk of injury.

(8)When the vehicle is parked on an anti-skid slope, please add anti-skid pads at the rear wheels (triangular anti-skid pads are included with the vehicle when departing).

6.11.Barometric pressure characterization data

When the vehicle pressure is 1MPa, the pressure characterization data is as follows:

Air compressor/unloading valve	Maximum cut-off pressure = 1.06MPa	
Multi circuit protection valve	Static closing pressure≥0.45MPa	
Rated working pressure of gas storage cylinder (Pneumatic braking system)	1MPa	
Minimum design pressure of the service brake system used for calculation	0.6MPa	
Tagging：1MPa=1000kPa		

Chapter 5 Vehicle Operation Inspection and Maintenance

6.12.Daily maintenance items

15. Fixed 24V low-voltage lead-acid battery;
16. The coolant level of the expansion tank;
17. Windshield washer fluid level;
18. Oil level in the power steering oil tank;
19. Air compressor air filter;
20. Check the tire pressure, inspect for tire damage and tightening of tire nuts;
21. Check for air leaks in the gas pipeline and liquid leaks in the water pipeline;
22. Whether the function of indicators (including instruments and indicator lights) is normal;
23. Check the driving status and braking performance.
24. Check that all high-voltage electrical compartment doors are locked to ensure safe driving.
25. Check the installation of power batteries and cable connections;
26. Check the dust around the power battery and regularly remove it;
27. Check the sealing of the battery compartment for any major damage.
28. When the temperature is below 0 ℃, the operating vehicle should be charged as soon as possible after receiving it to prevent the charging time from being prolonged due to the low battery temperature, which may affect the operation.

⚠注意

After inspection, the missing amount of liquid needs to be replenished. If it is found that the consumption is not normal, the cause should be identified, such as the sealing of the pipe joint, the sealing and fastening of the discharge and injection port covers, etc.

It is strictly prohibited to mix and use two or more different brands or types of coolant.

6.13.New car running in and out

In order to maintain the best performance, high efficiency, and long-lasting service life of the bus, please remember not to let the electric motor work at its maximum output power during the running in period of the new car. During the running in and out period, drive carefully and pay attention to any abnormal phenomena of

the vehicle at all times. The new car has a designated running distance of 2500 kilometers.

4. Preparation work before the new car is put into operation

(8) Clean the car and check the connection and fastening of bolts and nuts in various parts.

(9) Check whether the lubricating oil level of the rear axle, electric air compressor, and steering gear, as well as the liquid level in the brake fluid tank and power steering oil pot, meet the regulations, and check whether there is any leakage in the joints of each pipeline.

(10) Check if the braking system, transmission system, and steering mechanism are working properly.

(11) Check if the electrical equipment and lighting instruments are working properly.

(12) Check the oil level height of the lubricating oil in the drive axle, steering gear, etc. If it is insufficient, it should be added in a timely manner, and check whether there is any leakage in each part.

(13) Check the battery fluid level.

(14) Check if the tire pressure meets the requirements.

5. Maintenance during the running in period

(6) It should be driven on a flat and good road surface.

(7) In the initial driving stage, the temperature of the rear axle, transmission shaft, brake drum, battery, capacitor, inverter, etc. should be checked. Attention should be paid to the feeling of abnormal noise on the chassis. If any problems are found, the vehicle should be stopped immediately and the cause should be identified and the fault eliminated before continuing to drive.

(8) Special attention should be paid to the battery temperature.

(9) Load limit: Driving without load within 250km, overloading is strictly prohibited after 250km.

(10) Regularly check whether the capacitor box, battery fixing bolts, tire nuts, carriage and suspension fixing bolts are tightened, check whether the steering and braking work is normal, and check their free rotation.

6. Maintenance after closing

(8) Replace the hydraulic oil and oil tank filter element of the power steering hydraulic system.

(9) Check the connection part of the steering mechanism for looseness and damage.

(10) Tighten the bolts and nuts of the front and rear suspension systems (when fully loaded).

(11) Check the connections between the chassis and transmission parts according to the prescribed torque.

(12) Check the installation and fastening of various components of the hydraulic system of the steering mechanism.

(13) Lubricate and maintain according to the warranty service management manual.

(14) Check all parts of the vehicle for oil, water, and gas leaks.

6.14.Daily inspection before driving

6.14.1.Daily Inspection

In order to prevent accidents and ensure driving safety, please personally inspect the vehicle carefully before, during, and after driving, and do not omit it. And drive on a good and flat road surface.

6.14.2.Precautions before Inspection

4. The vehicle should be parked on a flat surface.
5. The key switch should be in the "OFF" position.
6. The parking spring brake is effective.

6.14.3.Cold machine inspection items

1. Check for any abnormalities discovered the day before.

2. Check the driver's seat and adjust it to the best position suitable for oneself to ensure driving safety.

3. Check all types of mirrors to ensure clear visibility.

4. Check the windshield washer fluid storage and add it as needed.

5. Check the locking condition of the car door.

6. Check the tightening of bolts and nuts in the steering system.

7. Check the firmness of the connection of each bolt and nut in the suspension system, and whether there are loose dirt, rust or wear around it.

8. Check if there is any leakage or damage to the shock absorber.

9. Check the connection, fastening and interference of the brake control system.

10. Check if there is any air leakage in the brake pipeline and remove any water from the air reservoir while it is still filled.

11. Check the tire pressure and tread depth, check for cuts, cracks, and uneven wear on the tread, and remove foreign objects hanging on the tread and tread.

12. Check the oil level of the power steering gear.

13. Check whether the electrolyte level and concentration of the battery meet the standards.

14. Check if there is any damage or grounding caused by friction between the wiring harness and other components.

15. Check the lubrication condition of each lubrication point and add oil in a timely manner.

6.14.4.Startup Inspection

1. When the key reaches the ON position, check the operation of instruments and indicator lights such as the water temperature gauge, SOC battery level gauge, parking brake light, charging indicator light, and low air pressure warning light.

2. Check the horn and windshield wiper.

(4) (1) Press the horn button to confirm if the pronunciation is normal;

(5) (2) First clean the windshield, then spray the detergent and check if the detergent sprays onto the glass normally;

(6) (3) Confirm that the wipers are working properly in each gear position;

3. Check the brake pedal to determine if the response time and efficiency are normal.

(4) Lightly press the brake pedal and check if its free travel is 7-9 °;

(5) The brake pedal should not feel uncomfortable when pressed to the bottom;

(6) When relaxing the pedal, there should be exhaust sound at the same time;;

4. Light inspection, turn on the switches of each light and check if all lights are lit up normally.

5. Check the free rotation and looseness of the steering wheel.

(3) With the front wheels maintaining a straight driving direction, gently turn the steering wheel left and right to check the free travel;

(4) Shake the steering wheel axially and radially to confirm if there is any looseness;

6. If there is excessive force or deviation, stop the vehicle immediately for inspection and wait for the fault to be resolved before driving.

7. After the trial run and parking, surround the vehicle and check for any oil, water, or gas leaks.

6.14.5.Precautions during vehicle use

1. It is strictly prohibited to start or drive when the alarm light is on or the alarm buzzer is sounding.

2. It is strictly prohibited to start and drive when the water temperature exceeds 80 ℃.

3. It is strictly prohibited to start or drive when the power battery is too low or the temperature is too high.

4. When the ignition switch is in the off position, the vehicle must not be driven because some electrical circuits are not connected, which endangers driving safety.

5. Ensure that the braking system is working properly, otherwise brake failure can cause loss of control, personal injury, and mechanical damage.

6. On wet and slippery roads, avoid causing the driving wheels to suddenly turn for a long time. Otherwise,

stress will be generated on the differential gear, damaging the rear axle.

7. When driving, it is also necessary to regularly check the working condition of the steering system. If there is a malfunction, the vehicle should be immediately parked in a safe area for maintenance.

⚠注意
If any abnormal phenomena are found during the inspection process, please promptly go to the authorized maintenance department of Yaxing Bus for adjustment and repair.

6.15.Regular inspection after vehicle operation

6.15.1.Pre - and post driving inspections every week of operation

1. Check the tire pressure, condition, and tightening of tire nuts.

2. When driving, check the inflation pressure of the tires, check for any mechanical damage, and carefully inspect the tightening of the tire nuts. Tighten in a cross symmetric order.

3. Check the inventory of detergent.

4. Park the car on a flat road and check the wiper water bottle. If there is less detergent, please add it.

5. Check whether there are any leaks in the drive axle, steering system, and the oil and gas pipelines of the entire vehicle.

6.15.2.Pre - and post driving checks every two weeks of operation

4. Power steering oil inspection

Park the car on a flat road surface, open the inspection port, and check the power steering fluid. When refueling or changing oil for the first time, first fill the oil tank with oil, turn on the START gear with the key, and the electric steering oil pump will run at low speed for a short period of time to drive the oil pump to fill the entire steering system quickly; During the refueling process, some air will be sucked in, so the steering wheel must be turned multiple times to the two extreme positions to allow the bubbles to escape. This will make it much easier to turn the steering wheel. When the power steering oil is insufficient, add it to the oil tank level mark in a timely manner.

⚠注意
When not getting off the train for more than four days, the negative terminal of the battery needs to be disconnected.

5. Maintenance of battery compartment

In areas where snow melting agents are used, due to the high corrosiveness of snow melting agents and

their harm to electrical components, users are advised to maintain and clean the battery compartment in a timely manner.

Check the battery level and charge it promptly if there is a loss of power (do not charge frozen batteries).

When replacing the battery, be sure not to reverse it, otherwise it may damage the vehicle's electrical equipment.

6. Replacement of insurance pads

During use, if the fuse is blown, it must be replaced with a fuse with the same specifications as the original vehicle and bearing the Asian star logo. The capacity of the fuse or the jumper fuse must not be changed arbitrarily.

6.16.Precautions for Electrical Maintenance and Care

6.16.1.Precautions before maintenance and upkeep

For safety reasons, the following three operations must be performed before repairing, maintaining, or servicing high-voltage compartment components or drive motors:

2. Turn off the key switch, remove the key, and have the operator keep it with them;

3. Cut off the 24V power main switch (manual power main switch);

4. Disconnect the high-voltage maintenance switch from the battery box and high-voltage distribution box (see Section 5.5.5 for details).

5. If maintenance work is only carried out on low-voltage electrical appliances and there is no need to drive, the gear switch should be set to neutral N, and then the general fuel vehicle method can be used; If maintenance work is only carried out on mechanical equipment, it should be done with the key switch and 24V power switch turned off.

6. When disassembling high-voltage components for maintenance work, please contact our company or have a professional high-voltage electrician disconnect the high-voltage circuit before proceeding.

7. When cleaning the vehicle, please avoid high-pressure components and it is strictly prohibited to rinse them directly with water.

8. Before performing any welding operation, please disconnect the 24V power supply and unplug the low-voltage plugs of the vehicle controller and motor controller, otherwise it may cause damage to the computer board.

9. When parking for a long time, place triangular blocks at the wheels.

6.16.2.Instrument maintenance

4. Daily inspection and maintenance of instruments

When driving a vehicle in daily life, it is necessary to check whether the instrument panel is powered on normally, whether the instrument interface display is normal, and whether the symbol display is normal; Keep the instrument clean and ensure that all pointer gauges and display areas are clear and distinguishable without any dirt obstruction.

5. Definition of interface on the back of the instrument panel

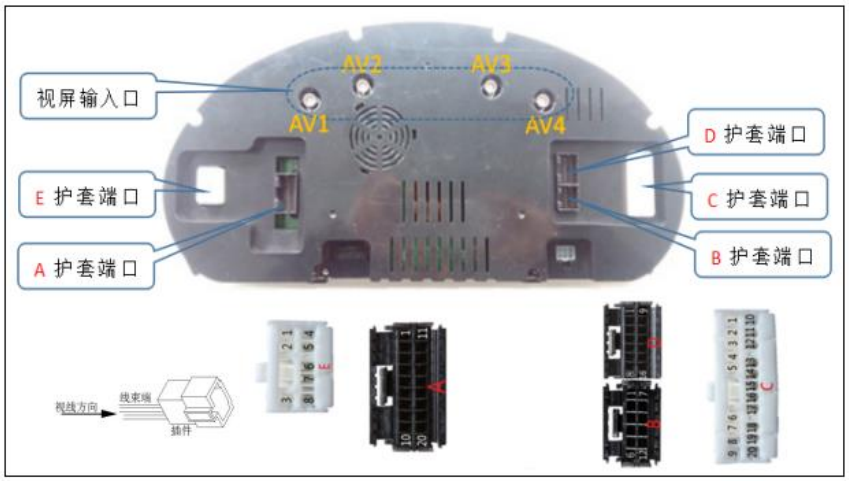

Figure 216 Diagram 1 of Interface on the Back of the Instrument

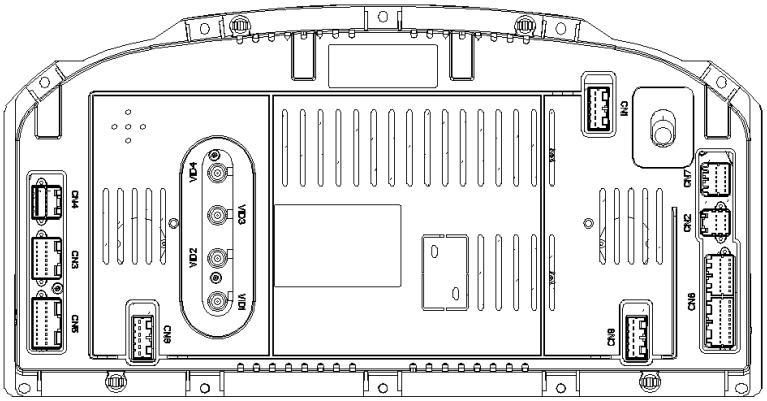

Figure 217 Diagram 2 of Interface on the Back of the Instrument

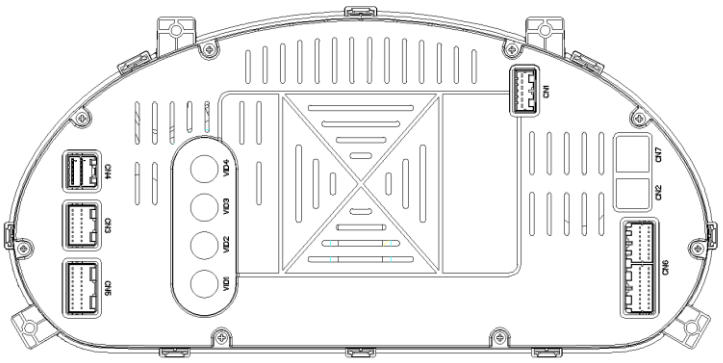

Figure 218 Diagram 3 of Interface on the Back of the Instrument

6. CAN bus instrument self diagnostic function

The CAN bus instrument performs self diagnosis of faults through the text bar below the display screen：

（4） (1) Monitor bus devices, such as when the vehicle controller or power CAN line is abnormal, text prompts such as: "Bus communication abnormal";

（5） (2) When the output port is short circuited, a text prompt such as "A certain electrical appliance is short circuited" will appear;

（6） (3) When an important alarm signal appears, a text prompt such as "low air pressure" will be displayed;

Common troubleshooting

Serial number	Fault phenomenon	Test method
1	Instrument reports CAN communication failure and abnormal data displayed on the screen	1. Check if the CAN wires connecting the instruments and equipment are normal; 2. Measure whether the terminal resistance between CAN wires is 60 ohms; 3. Measure whether the CAN line to ground voltage is normal; 4. If all the above checks are normal, it means the instrument is faulty.
2	The instrument display screen is black	4.Check whether the instrument's constant power and key ON power are normal; 5.The instrument power supply is normal. Disconnect the vehicle's manual main power supply and restart the instrument panel to see if the screen is black; 6.If all the above checks are normal and the instrument screen is still black, it is an instrument malfunction.

Serial number	Fault phenomenon	Test method
3	When a certain switch is turned on, there is no response, such as when the left turn switch is turned on, the left turn indicator plate has no response	1. Enter the instrument diagnostic interface and find the left steering input switch. When the left steering switch is turned on, the corresponding circle should display a "green dot". If it does not display, it indicates that the input switch is broken or the connection is disconnected; 2. If the switch input and wiring are all normal, and there is no green dot on the instrument switch diagnostic port, it is an instrument fault.
4	The instrument indicator symbol does not light up	1.The indicator lights on the instrument panel are determined by the switch or message signal, that is, when there is a signal input, the corresponding indicator light will light up. First, check whether the input signal is normal according to the interface definition; 2. If the input is normal but the indicator light is not on, it means that the indicator on the instrument panel is damaged and needs to be replaced.
5	Motor tachometer and speedometer malfunction (pointer does not respond while the vehicle is in motion)	The speed signal comes from the vehicle controller on the CAN line, which sends a motor speed message. If the motor tachometer in the instrument panel is normal but the speed pointer does not move, the speedometer head of the instrument panel is damaged. If the speed message is normal but the tachometer does not move, the instrument panel needs to be replaced
6	The front or rear axle pressure gauge indicates abnormal or no change	According to the interface definition, measure the input value (resistance or voltage) of the air pressure sensor. If there is no change, it indicates that the sensor is faulty and needs to be replaced. If the change value is normal, it indicates that the module or instrument is damaged. First, replace the corresponding module. If the problem still exists, replace the instrument.
7	SOC pointer unresponsive	The SOC pointer indication is synchronized with the SOC score ratio on the display screen. If the numerical indication is normal, it is a pointer meter fault if the pointer is abnormal. If everything is abnormal, it is a message signal error. Please check the SOC message information;
8	Low voltage battery pointer meter	3. Check if the instrument power supply and key gear power supply are normal; 4. If the power supply of the instrument is normal and the pointer

Serial number	Fault phenomenon	Test method
		indication is abnormal, it is a voltage pointer meter fault.

6.16.3.Precautions for Maintenance of High Voltage Electrical Appliances

1. Power lithium batteries belong to high-voltage direct current power sources. When maintaining power lithium batteries, they pose great risks and must be operated by professional maintenance personnel;

2. When repairing high-voltage electrical components, it is necessary to wait for 5 minutes after the power is cut off, and the high-voltage maintenance switch must be unplugged;

3. When repairing, choose to wear insulated gloves for operation. When using metal tools, it is necessary to completely protect one end of the tool handle with insulating tape to prevent the tool from becoming a short-circuit conductor and causing danger;

4. If replacing the power lithium battery, the first step is to disconnect the battery box from the entire circuit and handle the insulation protection of the exposed terminals;

5. Regularly inspect the waterproof and ventilation equipment inside the high-voltage equipment to ensure that there is no accumulated water in the cabin and that the ventilation openings are well ventilated;

6. Maintenance of power batteries should be carried out according to the manual provided by the battery manufacturer for the actual vehicle configuration, or by contacting after-sales service.

⚠警告

- All orange wires of the vehicle are high-voltage harnesses and cannot be touched or cut at will;
- Non professional maintenance personnel are prohibited from touching or disassembling high-voltage electrical appliances (components connected to the orange wire harness), and unrelated personnel are prohibited from opening the high-voltage electrical appliance compartment;
- Strictly prevent the insulation layer of the high-voltage wire harness from being damaged and leaking electricity during general maintenance operations;

6.16.4.High voltage maintenance requirements

1. The maintenance of high-voltage circuits must be carried out by qualified electricians holding high-voltage electrician certificates, and must strictly comply with the safety operation procedures for electricians (electrician certificate instructions: special operation certificates issued by the country/region where the vehicle operates, electrician operation certificates, low-voltage operation and maintenance certificates).

2. Before maintenance of the high-voltage system, the high-voltage manual maintenance switch must be cut off according to the prescribed method (unplug the high-voltage maintenance fuse), and wait for more than 5 minutes before operation. High voltage system: motors and their controllers, high-voltage distribution boxes, electric hydraulic power steering pumps, electric air compressors, electric air conditioners, power batteries and other high-voltage components.

3. When inspecting and repairing high-voltage power supplies, it is necessary to wear insulated gloves and shoes, use insulated tools, and under no circumstances should the positive and negative poles of the power battery be in contact at the same time.

4. Tools required for insulation testing: 1000V megohmmeter, 800V multimeter, 1000A clamp meter, insulation tools, insulation gloves, etc. The testing instrument needs to be confirmed to be working properly before use to avoid high voltage accidents caused by internal problems of the instrument.

6.16.5.High Voltage Manual Maintenance Switch (MSD)

1. Manual maintenance switch is an orange electrical component used to manually cut off high-voltage lines and provide safety protection function (see the schematic diagram of manual maintenance switch).

2. Before carrying out maintenance work on the vehicle, relevant personnel need to disconnect the manual maintenance switch. After the maintenance work is completed, they need to ensure that the manual maintenance switch is installed in place.





Figure 219 Schematic diagram of high-voltage box Figure 220 Schematic diagram of manual maintenance switch

3.Steps for disassembling and maintaining the switch

(4) Step 1: As shown in Figure 1 (Schematic diagram of disassembly and maintenance switch steps ①), use your left thumb to press down on the buckle position marked by arrow A, while using your right thumb to

open the handle of the maintenance switch in the direction indicated by arrow B to the angle shown in Figure 2.

(5) Step 2: As shown in Figure 2 (Schematic diagram of disassembly and maintenance switch steps ②), continue to press down on the position marked by arrow A with the left thumb, and at the same time, use the right thumb to continue to open the handle of the maintenance switch in the direction indicated by arrow B to the angle shown in Figure 3 (Schematic diagram of disassembly and maintenance switch steps ③), that is, the handle forms a 90 degree angle with the maintenance switch.

(6) (Step 3: As shown in Figure 4 (schematic diagram of disassembly and maintenance switch steps ④), hold the handle of the maintenance switch cover with your right hand and gently pull out the cover in the direction indicated by the arrow A to complete the disassembly of the maintenance switch.

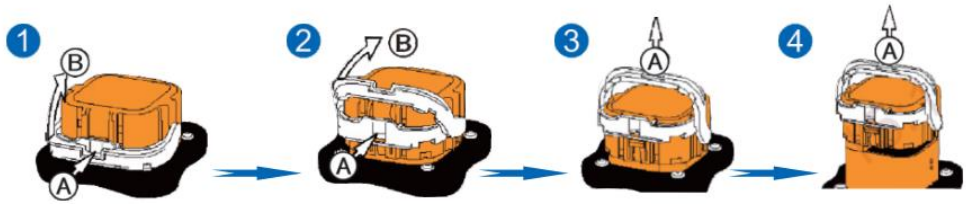

Figure 221 Schematic diagram of disassembly and maintenance switch steps

4.Steps for installing and maintaining switches

(4) As shown in Figure 1 (Schematic diagram of installation and maintenance switch steps ①), hold the handle of the maintenance switch cover with your right hand, make the handle form a 90 degree angle with the maintenance switch, and gently insert the cover into the base in the direction indicated by the arrow A.

(5) As shown in Figure 2 (Schematic diagram of installation and maintenance switch steps ②), use the thumbs of both hands to slowly push the handle of the maintenance switch in the direction indicated by the B arrow until you hear a "click" sound and stop, as shown in Figure 3 (Schematic diagram of installation and maintenance switch steps ③). At this point, the maintenance switch is installed in place.

(6) As shown in Figure 4 (Schematic diagram of installation and maintenance switch steps ④), hold the upper cover of the maintenance switch with your right hand and pull it in the direction indicated by the arrow A to confirm whether the upper cover of the maintenance switch is installed in place.

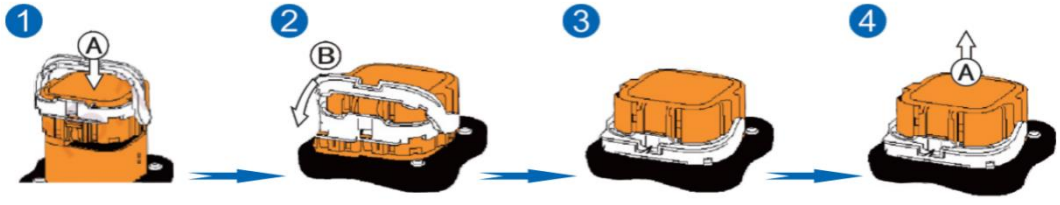

Figure 222 Schematic diagram of installation and maintenance switch steps

6.17.Maintenance and upkeep of power batteries

6.17.1.Precautions for use

1. Keep away from heat and fire sources, avoid prolonged direct sunlight, and pay attention to battery temperature and heat dissipation.

2. It is forbidden to place the battery in water for a long time.

3. Regularly clean the dust on the surface of the battery case.

6.17.2.Maintenance and Inspection

1. During operation and maintenance, please do not wear metal jewelry such as gold and silver jewelry boxes or watches.

2. When repairing and maintaining, please use insulated and professional tools, wear insulated gloves and insulated shoes.

3. It is strictly prohibited for operators to operate without wearing protective equipment.

4. After the maintenance work is completed, please clean the tools and materials in a timely manner, and do not place metal objects inside or on top of the battery.

5. Before connecting and dismantling the system cables, please ensure that all high and low voltage switches are disconnected.

6. It is prohibited to dissect batteries or battery packs without authorization to avoid danger. If repairs are needed, please contact the battery manufacturer or Yaxing maintenance personnel.

7. The maintenance and installation of power batteries should be carried out according to the following steps: ① Installation of battery box ② Installation of high-voltage wiring harness between batteries ③ Installation of low-voltage wiring harness between battery boxes ④ Installation of heating wiring harness between battery boxes ⑤ Installation of MSD

8. For some batteries that consider equipotential, it is necessary to ensure that the equipotential braided wire harness is firm and reliable.

9. When the wiring harness connection between batteries is made using the fastening bolt method. After removing the protective cover plate at the wiring junction, it is necessary to wear insulated gloves and use a torque wrench to tighten it. The torque value should be set between 20NM and 25NM. Ensure that the terminal holes are aligned with the connector holes, that there are no impurities between the high-voltage terminals and connectors, and that the bolts are not twisted off center.

10. If the battery electrode adopts a quick connector method, check whether the quick connector locking device is fastened.

11. Check if the installation and fixation of the wiring harness are reliable, with a spacing of 300mm to 400mm between the fixing points. Stay away from heat sources and areas prone to wear and tear.

12. Check the sealing of the battery standard box, and immediately contact after-sales maintenance for any battery box found to have sealing issues.

13. Dust cleaning: Excessive dust on the heat sink affects heat dissipation; Excessive dust at the power connection may cause low insulation; Use a dry cloth or chicken feathers to dust off and keep it dry and clean.

14. Check the alarm information, and if there is a battery alarm, promptly report it to Yaxing after-sales or battery manufacturer.

6.17.3.Storage Requirements

1. **The storage attention items and storage time of power batteries must meet the general requirements in the table below.**

Follow the project	**Specific requirement**
Environmental requirements	Indoor ventilation, cleaning, sun and rain protection
Requirements for battery storage spacing	Distance ≥ 1 meter
Distance requirement for batteries to stay away from heat sources	Distance ≥ 3 meters
Stay away from explosive materials	Not allowed to be placed in the same room with explosive materials
Warning signs	There should be high voltage, flammable and explosive warning signs in the battery storage area
Fire fighting equipment	Fire extinguishing devices such as fire sand, fire hydrants, insulated gloves, and gas masks should be installed in the battery storage area
Storage temperature	-35～65℃
Humidity requirements	≤85%

Follow the project	**Specific requirement**
Storage power requirements	40%≤SOC≤80%

2. Precautions for power battery storage

(1) Before storing the battery, it is necessary to ensure that the protective cover above the battery box is securely installed and undamaged. Check if the positive and negative terminals of the battery box have been wrapped with high-voltage insulation sleeves or other insulation materials to ensure that no metal parts are exposed to avoid short circuits.

(2) The battery should not be inverted or placed horizontally to avoid mechanical impact or heavy pressure. The battery should be equipped with specialized fixtures and placed uniformly in an environment with temperature, humidity, and smoke detection

(3) The optimal SOC range for battery storage is between 40% and 60%. Long term unused batteries require battery maintenance every three months (refer to the battery manual for specific maintenance procedures).

(4) When using a long-term battery for the first time, perform at least one battery maintenance to activate the battery system and restore its optimal performance.

6.17.4.Special Instructions

1. The maintenance and upkeep of the power battery section shall be based on the maintenance manual provided by the actual vehicle installation battery manufacturer, and the contents of this manual shall be followed for reference.

2. If the warranty period of the power battery expires, it should be carried out in accordance with the relevant national battery recycling standards and should not be used again.


It is strictly prohibited to touch the positive and negative poles of the battery case with both hands at any time. It is strictly prohibited to plug and unplug high-voltage plugs, external fuses, MSD, etc. without power off. It is strictly prohibited to squeeze, puncture, burn or other behaviors on batteries. When cleaning the vehicle, please avoid high-pressure components and it is strictly prohibited to rinse them directly with water.

6.17.5.Common Battery System Malfunctions

Content	Cause analysis	Handling measures
Charging malfunction	Not using European standard charging	Please charge the charger according to the communication protocol
	Charging circuit leakage	Check if the insulation resistance between the positive/negative pole of the charging gun and charging socket and the ground is normal (requirement>3M Ω)
BMS malfunction	Various faults in BMS system	Contact our designated after-sales service center
Battery undervoltage alarm	Low battery level or single battery failure	Charge or contact our designated after-sales service center
Battery high temperature alarm	Cooling system failure or internal heating of battery	Check the cooling system or contact the battery manufacturer for service
Battery pressure difference alarm	Discrete voltage of battery cells	Balance processing or contact battery manufacturers for service
Battery discharge overcurrent alarm	Excessive discharge current	Avoid sudden acceleration during driving

6.18.Use and maintenance of integrated controllers

6.18.1.Safety precautions

8. It is prohibited to plug and unplug connectors such as vehicle controllers, drive motors, and integrated controllers with power on, as it may cause hardware damage to the electronic control system.

9. During the welding operation of the entire vehicle, protective measures must be taken for the low-voltage wiring harness connectors such as the vehicle controller, drive motor, and five in one controller to avoid burns to the surrounding wiring harness.

10. It is prohibited to directly power on the motor controller to high voltage without a pre charging circuit, as this may cause damage to the capacitor of the motor controller.

11. It is prohibited to open the entire machine casing, replace or modify parts, alter the peripheral electrical

circuits of the electric drive system, or use non original spare parts without permission or professional training.

12. The maintenance of electronic control system products must be completed by qualified professionals. The customer is responsible for ensuring that all operators have received professional training and wear protective gear to ensure personal safety.

13. High voltage safety warning signs are prominently displayed on electronic control system products. Please read them carefully before operating the products and ensure compliance with safety regulations during the operation process.

14. The high-voltage safety warning signs are shown in the following figure:



Figure 223 High voltage safety warning sign

危险

Do not disassemble or repair this product by yourself. If you find any damage to the casing or product malfunction, please contact customer service.

Recommended fixing points should be used to lift or secure this product.

When debugging or installing this product, do not change any parts of the motor and motor controller. Apply external loads to the motor and motor controller housing.

This product may be in a high temperature state during operation, which may cause serious burns or other injuries.

Do not touch the surface of the product during operation or immediately after shutdown, as the motor controller may generate high voltage, which may cause electric shock injury.

Before installing or disassembling the product, please ensure that the high-voltage power supply is turned off or disconnected, and the auxiliary battery (12V/24V battery) is turned off or disconnected.

This product must be installed by qualified and authorized personnel in accordance with vehicle standards and industrial practices. Even if the product is not connected to a high-voltage power source, insulation protection should be carried out when operating the product.

Before disassembling and maintaining this product, it is necessary to wait for at least 5 minutes to ensure that

the internal capacitor is completely discharged and avoid personal injury caused by capacitor discharge.

Do not disassemble the system in adverse weather conditions such as rainy weather, heavy fog, frost, and sandstorms.

Violation of regulations and improper use may result in product damage or personal injury.

6.18.2.Integrated Control and Drive Motor Maintenance Project

4. Integrated controller maintenance project

Serial number	Maintain content	Technical requirement	Tool	Operating standards	Maintenance cycle
1	Appearance	The whole machine is intact, without any signs of collision or damage	Visual inspection	Visually inspect the entire machine for completeness, any signs of collision or damage. If there is damage that affects performance, it needs to be replaced.	Every 5000 kilometers
		The high and low voltage wiring harness connections of the entire machine are dry, dust-free, and show no signs of overheating or discoloration	Brush and vacuum cleaner Visual inspection	Use a brush or vacuum cleaner to clean the surface, removing surface dust, impurities, and foreign objects	Every 5000 kilometers
		There is no accumulation of foreign objects or impurities around the exhaust valve	Brush and vacuum cleaner	Visually inspect whether there are signs of overheating or discoloration at the connection of the high-voltage harness. If so, contact a professional manufacturer for technical judgment	Every 5000 kilometers
2	Install	The motor controller body and the frame are securely installed, and	Torque wrench and sleeve/hexagonal combination kit	Use a brush or vacuum cleaner to clean the surface, removing surface dust, impurities, and foreign objects	Every 20000 kilometers

Serial number	Maintain content	Technical requirement	Tool	Operating standards	Maintenance cycle
		the torque value of the fasteners meets the design requirements of the vehicle manufacturer		Cooperate with corresponding tools, conduct re inspection, adjustment and fastening according to the design requirements of the vehicle manufacturer	
		The rubber pad shows no signs of aging, cracking, or crushing	Visual inspection	Visually and by hand, the shock absorber pad shows no signs of aging, cracking, or crushing.	Every 20000 kilometers

5.

Maintenance project for drive motor

Serial number	Maintain content	Technical requirement	Tool	Operating standards	Maintenance cycle
1	Appearance	The whole machine is intact,without any signs of collision or damage	Visual inspection	Visually inspect the entire machine for completeness, any signs of collision or damage.	Every 5000 kilometers
		The high and low voltage wiring harness connections of the entire machine are dry, dust-free, and there are no foreign objects or impurities around the exhaust valve	Brush and vacuum cleaner	Use a brush or vacuum cleaner to clean the surface, removing surface dust, impurities, and foreign objects	Every 5000 kilometers

Serial number	Maintain content	Technical requirement	Tool	Operating standards	Maintenance cycle
2	Install	Installation torque of motor housing and mounting plate bolts	Torque wrench and socket/outer hexagonal combination kit	Cooperate with corresponding tools, conduct re inspection, adjustment and tightening according to the established torque requirements	Every 20000 kilometers
		The motor suspension plate shows no signs of fracture, open welding, etc	Visual inspection	Visually inspect the suspension mounting plate for signs of breakage, open welding, etc. If it is necessary to replace the suspension mounting plate.	Every 20000 kilometers
		The shock absorber pad shows no signs of aging, cracking, crushing, or rubber peeling	Visual inspection	Visually and by hand, the shock absorber pad shows no signs of aging, cracking, crushing, or rubber peeling.	Every 20000 kilometers
		a) The motor flange and transmission shaft flange bolts are securely installed without any missing parts. The torque value of fasteners meets	Visual inspection and hand perception recognition	a) Visually inspect and coordinate with corresponding tools, recheck and tighten according to the established torque requirements b) Visual inspection and hand perception	Every 20000 kilometers

Serial number	Maintain content	Technical requirement	Tool	Operating standards	Maintenance cycle
		the design requirements of the vehicle manufacturer b) Under static conditions, there is no axial displacement between the motor shaft output flange and the transmission shaft flange		recognition, statically hold the motor shaft output flange, apply reciprocating force to the transmission shaft flange, and detect whether there is displacement in the axial direction	
		The bolts used for the motor suspension damping pad must not be broken and the torque must meet the design requirements of the vehicle manufacturer	Torque wrench and sleeve/hexagonal combination kit	Cooperate with corresponding tools, conduct re inspection, adjustment and fastening according to the design requirements of the vehicle manufacturer	Every 20000 kilometers
		The comprehensive angle meets the requirements of the vehicle design	Visual inspection and laser alignment instrument	Cooperate with corresponding tools, conduct re inspection, adjustment and fastening according to the design	Every 20000 kilometers

Serial number	Maintain content	Technical requirement	Tool	Operating standards	Maintenance cycle
		Note: The motor bearings are designed to be sealed and maintenance free, and do not require maintenance		requirements of the vehicle manufacturer	

6. Maintenance project for high-voltage cables in the system

Serial number	Maintain content	Technical requirement	Tool	Operating standards	Maintenance cycle
1	Appearance	The wiring harness is intact, and the outer insulation layer shows no signs of peeling, damage, cracking, aging, etc	Visual inspection	Visually inspect whether the wiring harness is complete, whether there are signs of breakage, damage, cracking, etc., and pay special attention to checking the corners and cable trays	Every 5000 kilometers
		The air around the wiring harness is well ventilated, making it easy to dissipate heat. There should be no sharp spikes/objects around, dry, and dust-free	Visual inspection, brush and vacuum cleaner	Visually inspect and use a brush or vacuum cleaner to clean the surface, removing surface dust, impurities, and foreign objects	Every 5000 kilometers

Serial number	Maintain content	Technical requirement	Tool	Operating standards	Maintenance cycle
2	Install	The bending radius of the wire harness should be greater than or equal to 8 times the diameter	Visual inspection and tape measure	Visually inspect and use a tape measure to check if the bending radius of the wiring harness is greater than or equal to 8 times the diameter	Every 5000 kilometers
		The wiring harness needs to be securely tied and not loose. The wiring and fastening of the entire vehicle must meet the design requirements of the vehicle manufacturer	Visual and manual perception	Visually inspect and manually sense the binding of the wiring harness. For example, verifying if the tie tape is missing, if the fixing clip is loose, if the fixing adhesive falls off, if the wire body protective cover is missing, etc	Every 5000 kilometers
		The wiring harness cannot be bundled with low-voltage wiring harness, air circuit, oil circuit, water circuit, etc	Visual inspection	Visually inspect whether the wiring harness is tied to low-voltage wiring harnesses, air circuits, oil circuits, water circuits, etc., unless effective isolation measures are ensured between them	Every 5000 kilometers
		The wiring harness terminals	Torque wrench and	Cooperate with corresponding tools, conduct re inspection and	Every 20000 kilometers

Serial number	Maintain content	Technical requirement	Tool	Operating standards	Maintenance cycle
		are not loose and securely fastened	sleeve/hexagonal combination kit	tighten according to the established torque requirements	
		The wire harness locker is not loose and securely fastened. Lock base torque: 15Nm; Lock cover torque: 12Nm	Lapp —61610000 —61610013	Cooperate with corresponding tools, conduct re inspection and tighten according to the established torque requirements	Every 20000 kilometers
		The wire harness cover/cover plate is not loose and securely fastened	Torque wrench and sleeve/hexagonal combination kit	Cooperate with corresponding tools, conduct re inspection and tighten according to the established torque requirements	Every 20000 kilometers

6.18.3.Product Environment and Cooling Requirements

3. Environmental and cooling requirements for electric drive products

Project	Requirement	Remarks
Coolant temperature during operation	-40 ℃ to 85 ℃	Maximum temperature ≤ 80 ℃
Working environment temperature	-40 ℃ to 85 ℃	Not exceeding 75 ℃ under full performance
Storage temperature	-40 ℃ to 85 ℃	
Coolant specifications	50% ethylene glycol+50% pure water	Select appropriate specifications based on the actual operating environment

Project	Requirement	Remarks
		temperature.



- ●Before filling the coolant, the cooling circuit should be flushed (to remove impurities), and the coolant should not corrode the system and pipelines.
- ●Ethylene glycol must comply with the corresponding standards (lightweight ASTM D3306 III or heavy-duty ASTM D6210 III).
- ●The coolant composition is typically 50% ethylene glycol+50% pure water, ensuring appropriate corrosion resistance.
- ●It is strictly prohibited to mix and use two or more different types of coolant.
- ●When adding coolant, it is necessary to add coolant of the same brand and specifications (distilled water or tap water is prohibited).
- ●When the cooling system fails, it will cause the driving system temperature to be too high, and the driving system will enter a power reduction protection state. When the temperature seriously exceeds the limit, the shutdown protection will be activated.

4. Cooling system maintenance project

Serial number	Maintain content	Technical requirement	Tool	Operating standards	Maintenance cycle
1	Appearance	All cooling water pipe joints/adapters of the vehicle have no signs of leakage, and the water pipes are not cracked or aged. There is no bending or deformation at the bend that affects the normal flow of coolant	Visual inspection	Visually inspect all cooling water pipe joints/adapters of the vehicle to ensure there are no signs of leakage, no water pipe ruptures, and especially no dead bends, deformations, or damages at the hose bends	Every 5000 kilometers
		The coolant level in the expansion tank shall not be lower than the lower line mark	Visual inspection	Visually check the coolant level in the expansion tank	Every 3000 kilometers
		The radiator grille is not blocked by foreign objects	Visual inspection	Visually inspect whether there are foreign objects	Every 5000 kilometers

Serial number	Maintain content	Technical requirement	Tool	Operating standards	Maintenance cycle
				blocking the heat dissipation grille	
2	Install	The installation fasteners for the cooling water pump, cooling fan components, and expansion tank are securely installed, and the torque values meet the design requirements of the vehicle manufacturer	Visual inspection and torque wrench and sleeve/outer hexagonal component	Cooperate with corresponding tools, conduct a review and tighten according to the design requirements of the vehicle manufacturer	Every 20000 kilometers
3	Coolant composition inspection	Using coolant with the correct composition, the freezing point of antifreeze can be selected according to local climate conditions, and it is generally recommended to be 5-10 ℃ lower than the local minimum temperature	Visual inspection and antifreeze detector	Check if the coolant composition is suitable	Every 5000 kilometers
4	Replace the coolant	Replace the coolant every 50000 kilometers or every 2 years (whichever comes first)	Cooling fluid	1. Check the overall pipeline for leaks; 2. Open the drain valve of the water tank or the drain valve of the drain pipe to drain the coolant completely; 3. Keep the water pump running, continuously add clean water until the flowing water is clean and transparent, and drain the clean water completely; 4. Keep the water pump running and add the specified type of coolant from	Every 50000 kilometers/every two years

Serial number	Maintain content	Technical requirement	Tool	Operating standards	Maintenance cycle
				the expansion tank filling port, with the liquid level between min and max; 5. If the water level drops after the vehicle has been running for a period of time, it is necessary to add coolant.	

⚠注意
The manufacturer regulations for new energy auxiliary systems vary, and specific parameters shall be implemented according to the regulations of each manufacturer.

6.18.4.Common System Malfunction Handling

Fault name	Possible causes of malfunction	Troubleshooting methods
The high-voltage distribution fuse inside the integrated circuit breaker is blown	High voltage circuit breaker	1. Check the insulation resistance between the positive and negative terminals of the power battery and the casing or vehicle ground;
		2. Check the insulation resistance between the input/output positive and negative poles of the high-voltage distribution box and the shell;
		3. Check the insulation resistance between the positive and negative poles of the motor controller and the vehicle's ground;
		4. It is normal for the above resistors to be greater than 2M Ω.
Throttle malfunction	Short circuit in throttle harness	The normal accelerator pedal has two 5V power sources and grounding. Check the chassis harness and accelerator plug, and locate the short circuit point
	The throttle harness has an open circuit	The normal accelerator pedal has two 5V power sources and grounding. Check the chassis harness and accelerator plug, and locate the open circuit point
Brake pedal malfunction	The signal wire of the electronic brake harness is disconnected or missed	Organize wiring harness

Fault name	Possible causes of malfunction	Troubleshooting methods
	Electronic brake pedal malfunction	Replace the electronic brake pedal
High temperature fault of motor and its controller	The coolant level is too low	Check for any leaks in the waterway, and repair if there are any; Add coolant to the required level
	Abnormal cooling fan	Check if the power supply and control signals of the cooling fan are normal. If they are normal, replace the cooling fan. If they are abnormal, check if the fan control relay and the vehicle controller fan control output are normal
	Pump malfunction	Check if the power supply of the water pump is normal. If it is normal, replace the water pump. If it is abnormal, check if the fan control relay and the vehicle controller fan control output are normal
	Blockage of waterways resulting in poor water circulation or air inside the waterways	Check for foreign objects in the waterway or emptying of the water supply pipe
	Abnormal temperature detection inside the motor and its controller	After excluding all the above, the temperature of the motor and its controller has not decreased. Please contact our designated after-sales service center
Gear malfunction	Caused by improper operation	Follow the gear shift specifications again.
	Gear panel malfunction	Replace the gear panel
	Short circuit or open circuit in the wiring harness	Organize the wiring harness to avoid short circuits or open circuits
Communication failure of motor controller	CAN harness short circuit or open circuit	Organize the wiring harness to avoid short circuits or open circuits
	The grounding wire of the motor controller is either disconnected or missed	Reliable grounding of the grounding wire of the motor controller
	Abnormal CAN circuit inside the motor controller	Contact our designated after-sales service center
CAN communication failure of integrated controller	CAN harness short circuit or open circuit	Organize the wiring harness to avoid short circuits or open circuits
	Abnormal CAN circuit in the internal controller of the distribution box	Contact our designated after-sales service center
	The CAN harness of the auxiliary controller has a short circuit or open circuit	Organize the wiring harness to avoid short circuits or open circuits
	Abnormal CAN circuit inside the auxiliary controller	Replace the auxiliary controller

Fault name	Possible causes of malfunction	Troubleshooting methods
Rear compartment door not closed fault	Rear compartment door switch detection sensor wiring harness fault	Organize the wiring harness to avoid wiring harness malfunctions
	Rear compartment door switch malfunction	Replace the rear compartment door switch

6.19.电动液压助力转向泵的使用与维护

⚠注意
When performing this operation, it is necessary to ensure strict adherence to high-voltage maintenance requirements.

6.19.1.Maintenance Instructions

1. First maintenance: 2500 kilometers. Please replace the hydraulic oil and clean the oil tank and pipeline system during the first maintenance. When replacing the oil, carefully clean the oil tank, oil filter, and pipeline, and check the fixing screws.

2. Every 20000 kilometers of driving, the hydraulic oil should be replaced and the pipelines should be cleaned to keep the system clean.

6.19.2.Regular Inspection

Serial number	Content	Inspection items	Problem and Handling
1	Power steering motor oil pump	Check the appearance	Is there dust on the exterior of the assembly? Solution: Remove the dust
2		Power steering connector	Terminal damage, looseness, deformation, and signs of arcing, and timely replacement of connectors
3		Check the hydraulic oil	Is the hydraulic oil level within the specified scale range; Regularly replace the filter element (with a filtration accuracy of 25 μ m); Regularly inspect the oil tank and replace the oil core; The oil tank must be sealed well and no stolen goods should seep in

Serial number	Content	Inspection items	Problem and Handling
4		Power steering motor oil pump oil circuit detection	High pressure oil pipe is damaged and leaking. Treatment method: tighten the oil pipe joint or replace the oil pipe
5		Power steering motor oil pump bracket	Loose, damaged, deformed, broken, or structurally damaged bracket bolts. Solution: Tighten the bracket screws or replace the bracket
6	Power steering motor controller	Check the appearance	Clean the exterior of the controller, especially the radiator and wire plugs, with a wind gun and brush (do not unplug the wire plugs) to ensure that the electronic control device is clean and dry.
7			Check the fixing condition of the wire plug to ensure that the plug is not loose, dirty, etc.

⚠注意

- When the steering pump is working, personnel must not touch it;
- Do not hold the steering wheel in the extreme position for more than 10 seconds, otherwise the temperature of the steering pump will rise sharply, which can easily cause damage to the pump.
- Wait for the electric steering pump to operate normally before turning the direction;
- When making sharp turns, stationary turns, etc., turn the steering wheel to its limit and immediately retract the steering wheel (which will not affect the turning angle) to avoid hitting the limit position of the steering wheel;
- Pay attention to replacing low-temperature anti-wear hydraulic oil in winter (it is recommended to use winter hydraulic oil below -10 degrees Celsius (Kunlun Tianrun TFIII automotive automatic transmission fluid; Shell Sibeli S3 ATFIII MD3 automatic transmission oil and Castrol DEXRON-III automatic transmission oil);
- Do not use engine oil as a hydraulic transmission medium.

注意

●When the steering pump makes abnormal noises, check whether the oil level in the oil tank is too low, whether the filter screen is blocked, and whether the oil pipe joints are loose.

●The manufacturer regulations for new energy auxiliary systems vary, and specific parameters shall be implemented according to the regulations of each manufacturer.

6.19.3.Common faults and troubleshooting

Fault type	Cause of occurrence	Exclusion method
The pump does not absorb oil or has insufficient oil	High viscosity of oil	Use oil with recommended viscosity
	The oil level in the fuel tank is too low	Add fuel to the designated oil level
	Leakage of oil suction pipe	Identify the leak and repair it
	Inhale air from the rotary seal of the pump	Disassemble the pump, inspect the rotary
	Motor reversal	Check the wiring and correct the steering
The pressure does not meet the requirements	The steady flow valve is stuck in the fully	Disassemble the valve, clean the valve core
	The steady flow valve is worn and the	Replace the corresponding worn parts
	The pressure regulating valve leaks, causing	Clean the pressure valve seat and valve core
	Damping hole is blocked	Clean and remove dirt and debris
	Flow bypass pressure, pressure cannot	Check if the oil circuit is twisted and if the
Noise	The filter cartridge is clogged and the oil	Check if the filter cartridge is clogged. If it
	There is gas entering the hydraulic oil inlet	Check if there is any leakage in the oil inlet
	The inlet and outlet oil pipes are too thin	Thicken and shorten the oil pipe, reduce
	Motor and controller parameters do not	Verify controller parameters
Turn heavy	Low oil volume in the oil tank	Add to standard oil level
	The safety valve is blocked	Disassemble the valve, clean it, and remove any dirt
	Flow valve stuck	Disassemble the valve, clean it, and remove any dirt

6.20.Use and maintenance of electric air compressor



When performing this operation, it is necessary to ensure strict adherence to high-pressure maintenance requirements. This model comes standard with an oil-free piston electric air compressor and is optionally equipped with an oil type electric piston air compressor.

6.20.1.Maintenance instructions for oil-free electric piston air compressor

Serial number	**Project**	Testing content	**Check maintenance time**					
		Driving distance	**Every day**	**5000 kilometers**	**15000 kilometers**	**30000 kilometers**	**120000 kilometers**	**240000 kilometers**
		cycle time		**Every month**	**Every 3 months**	**Every 6 months**	**Every 2 years**	**Every 4 years**
1	Noise	Inspect	√					
2	Vibration	Inspect	√					
3	Fixed bolt	Testing		√				
4	Gas and electrical connectors	Check the fastening		√				
5	Clean the external air filter	clear			√			
6	Clean the dust from the radiator	clear			√			
7	Clean the fan blades	clear			√			

8	Replace the external air filter	Clean or replace				√		
9	intake hose	Replace when cracks or hardening occur					√	
10	Motor insulation	Check the insulation resistance					√	
11	Shock absorber pad	Check and replace if there is severe wear and tear						√
12	密封部件	Check and replace if there is severe wear and tear						√
Explain	1. The mileage is calculated based on driving 200 kilometers per day. If the actual daily mileage deviates significantly from this, please calculate the corresponding maintenance cycle based on the maintenance mileage. 2. The items marked with "√" require maintenance and upkeep.							

6.20.2.Maintenance requirements for oil type air compressors

1. First maintenance: After 20000 kilometers or 3 months, please replace the lubricating oil and air filter element during the first maintenance.

2. Clean the air filter: every 2000 kilometers or every week.

3. Replace the air filter: every 20000 kilometers or 3 months.

4. Advanced maintenance: Clean the temperature control valve components, replace lubricating oil, air filters, and corresponding seals every 90000 kilometers or 12 months, and carefully inspect the coupling gasket. Replace it if necessary.

5. Attention: The above maintenance cycle, mileage, or time should be based on the first to arrive. If working in dusty or high-temperature environments, the maintenance cycle of the compressor should be shortened.

6.20.3.Regular inspection

Please keep the machine clean. If there is a lot of dust on the surface of the machine, a suitable pipe can be connected to the exhaust port, and the exhaust valve can be opened to blow off the dust on the surface of the equipment;

Cleaning or replacement cycle of air filter: The external primary air filter element is generally required to be inspected and cleaned every 3 months, and replaced in a timely manner every 6-9 months depending on the intake quality and degree of fouling; The built-in secondary air filter element requires inspection and cleaning every 6 months, and timely replacement depending on the intake quality and degree of fouling between 12-18 months (the filter element is a routine maintenance part). Users can also adjust the frequency of maintenance based on the different working environments of the machines;

Every 3 months, you can independently check the fastening of major components and the sealing of gas pipelines, confirm that important bolts and nuts are not loose, and ensure the sealing of each gas pipeline connection and the smoothness of equipment operation.

Every 3 months, check whether the valve core moves flexibly, whether it closes quickly when shutting down, and whether the valve plate seal is good when closing.



- The allowable operating temperature range for air compressors is between -30 ℃ and 65 ℃.
- Check if there is any looseness in the bolts or nuts of each part.

- Is the pipeline normal.
- Whether the wires and electrical switches comply with regulations, and whether the wiring is correct.
- Is the voltage of the power supply correct.

6.20.4.Common faults and troubleshooting

Fault phenomenon	Causes	Exclusion method
The air compressor is not working	Air compressor high temperature alarm	Turn off the entire vehicle and wait for the air compressor to cool down before turning it on again
The motor cannot run or is stuck in rotation	①Line malfunction or low voltage ②Motor malfunction ③The host bit to death	① Ensure that the input power voltage meets the operating voltage requirements of the motor; ② Check whether there is an open circuit or poor contact in the internal wiring of the motor and the wiring on the power input side; ③ If the motor malfunctions, it needs to be replaced in a timely manner.
The motor rotates slowly	①The motor voltage is too low ②Motor obstruction ③Load start	①Check the voltage of the motor power supply; ②Check if there are any screws or other foreign objects inside the device that hinder its operation; ③Open the exhaust valve of the air compressor to ensure no load.
The host bit to death	Damaged moving parts or stuck by foreign objects	Check the crankshaft, bearings, connecting rods, pistons, piston rings, etc., and replace them if necessary.
Intense vibration or abnormal noise	①Loose connecting components ② Foreign objects fall into the host ③ Eccentric axle bending ④ Serious wear and tear on moving parts	① Check if all fasteners are loose; ② Check for foreign objects inside the device; ③ When the eccentric axle is bent or the components are severely worn, replacement should be carried out according to the situation.
Insufficient air pressure or reduced displacement	① The motor rotates slowly ② Air filter clogged ③ Leakage of safety valve ④ Exhaust pipeline leakage ⑤ The sealing ring is damaged ⑥ Valve plate damaged or stuck ⑦ Wear or damage to piston rings and cylinders	① The motor rotates slowly. Please refer to the second item above; ② Check if the air filter element is clean and intact, and clean or replace it if necessary; ③ Check the sealing condition of the safety valve and exhaust pipeline with foam water at the pipeline connection, and adjust or replace them properly; ④ Check valve plates, piston rings, cylinders and other components, and clean or replace them as necessary.

Fault phenomenon	Causes	Exclusion method
Electromagnetic valve leakage	③ The 24V power plug is not connected properly. ④ The solenoid valve coil is damaged.	① Re insert the 24V low-voltage plug to ensure reliable connection; ② Replace the solenoid valve coil.
The cooling fan is not turning	② Blade damage ②The protective net deforms and gets stuck on the blades ③ Fan motor malfunction ④Low voltage control board malfunction	① Check if the control board connectors and wiring are in good contact; ② When the fan blades are damaged or the motor malfunctions, they can be replaced; ③ The deformation of the protective net can be repaired or replaced.

6.20.5.Routine Maintenance and List of Vulnerable Parts

Serial number	Name	Serial number	name
01	Primary air filter element	07	Solenoid valve
02	Secondary air filter element	08	Safety valve
03	Intake valve plate	09	Cooling fan
04	Exhaust valve plate	10	Low voltage controller assembly
05	○ Circle	11	Vibration damping pad
06	Piston ring		

Tagging: a. Items 01-02 are routine maintenance parts for the air compressor, while items 03-11 are vulnerable parts for the air compressor;

b. When the pumping efficiency is significantly reduced, vulnerable parts numbered 03-06 can be inspected and cleaned or replaced according to the actual situation;

6.21.Chassis maintenance and upkeep

6.21.1.Routine maintenance of chassis

The first maintenance project list is as follows:

Serial number	Assembly category	Homework location	Maintenance action
1	Cooling system	Water pump, cooling water tank	clear
2	steering system	Steering system moving parts	inspect
3	Electrical box and	Central electrical box and rear enclosed electrical box	inspect

Serial number	Assembly category	Homework location	Maintenance action
	insurance		
4	Chassis wiring harness	Wiring harness and wires	inspect
5	Disc type front axle	Tie rod, steering knuckle arm, brake	Fastening
6	Disc type front axle	Wheel hub oil seal	inspect
7	Disc type front axle	Steering tie rod assembly	inspect
8	Disc type rear axle	Bridge package fuel plug, drain plug, wheel hub fuel plug, main cone oil seal	Check and clean
9	Disc type rear axle	Half shaft, brake, chamber fastening bolts, nuts	Fastening
10	Disc type rear axle	Wheel hub bearings	testing
11	Disc type rear axle	Wheel hub oil seal	inspect
12	Disc type rear axle	Main reducer assembly (oil)	replace
13	Drum type rear axle	Half shaft, brake fastening bolts, nuts	Fastening
14	Drum type rear axle	Bridge package fuel plug, drain plug, wheel hub fuel plug, main cone oil seal	Check and clean
15	Drum type rear axle	Wheel hub bearings	testing
16	Drum type rear axle	Wheel hub oil seal	inspect
17	Drum type rear axle	Main reducer assembly (oil)	replace
18	Rear axle oil lubrication drum	Bridge package fuel plug, drain plug, wheel hub fuel plug, main cone oil seal	Check and clean
19	Rear axle oil lubrication drum	Wheel hub oil seal	inspect
20	Rear axle oil lubrication drum	Half shaft, brake fastening bolts, nuts	Fastening
21	Rear axle oil lubrication drum	Brake chamber	inspect
22	Rear axle oil lubrication drum	Main reducer assembly and wheel rim assembly (oil)	replace

6.21.2.Vehicle oil replacement standards and key assembly parameters

4. List of lubricant filling points

Each time the assembly is disassembled, lubrication should be applied to all bearings, bushings, etc. during reassembly.

Serial number	Lubricating parts	Filling amount (g)	Lubricating grease specifications	Interval period (KM)
1	Oil seal at the output end of the drive motor	Apply evenly	CAM2 high-temperature grease	Every 36 months
2	Centralized lubricating oil tank	About 460g	Base pressure lithium grease NLJI0 #, 00 #, 000#	Supplement when the centralized lubrication monitor is short of oil alarm

Apply lubricating grease to the friction surfaces of parts with relative motion;

5. List of Fluid Information

Serial number	**Name**	Oil specification and model	**Filling amount**	**Maintenance cycle**
1	Rear axle main reducer	GL-5	about10L	Add lubricating oil by yourself: every 30000 to 50000 kilometers;
		HD-R03 (Hande specific)	about10L	If Hande axle uses Hande special gear oil, the replacement cycle is 100000 kilometers;
2	steering system	ATFIII	about6L	Every 12 months
3	Electric air compressor	APICH-4 and above (with oil type)	about2.5L	Every 12 months
4	Antifreeze (motor and plumbing)	Ordinary area: -25 # heavy-duty coolant Cold regions: -45 # heavy-duty	42L	Every 24 months

Serial number	Name	Oil specification and model	Filling amount	Maintenance cycle
		coolant		
5	Antifreeze fluid (power battery)	Ordinary area: -25 # heavy-duty coolant Cold regions: -45 # heavy-duty coolant	27L	Every 24 months

6. Oil parameters for rear axle

Usage area	Temperature range	Lubricating oil grade
Tropical regions	≥30℃	GL-585W/140-GB 13895-1992
Normal temperature area	-15℃～30℃	GL-585W/90-GB 13895-1992
Cold regions	-30℃～15℃	GL-580W/90-GB 13895-1992
High-altitude regions	≤-30℃	GL-575W/90-GB 13895-1992

b. For drum brakes: brake drum wear ≤ 2mm, friction plate wear ≤ 7mm

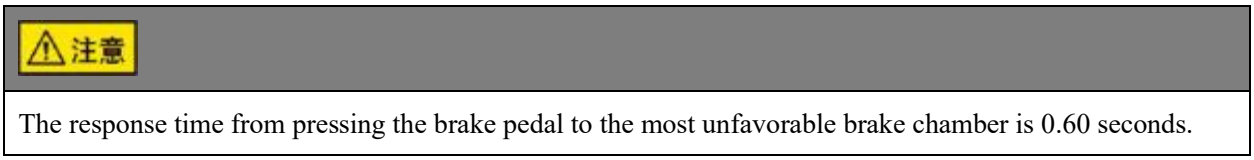

6.21.3.Tire Use and Maintenance

3. **Tire replacement**

After a certain period of driving, the tires of the vehicle have varying degrees of wear and tear. To ensure proper use and extend tire life, the tires should be rotated as shown in the following diagram every 8000 to 10000 kilometers of vehicle travel. If signs of premature or irregular tire wear are found, the four-wheel alignment should be checked immediately, and dynamic balancing and tire rotation should be performed.

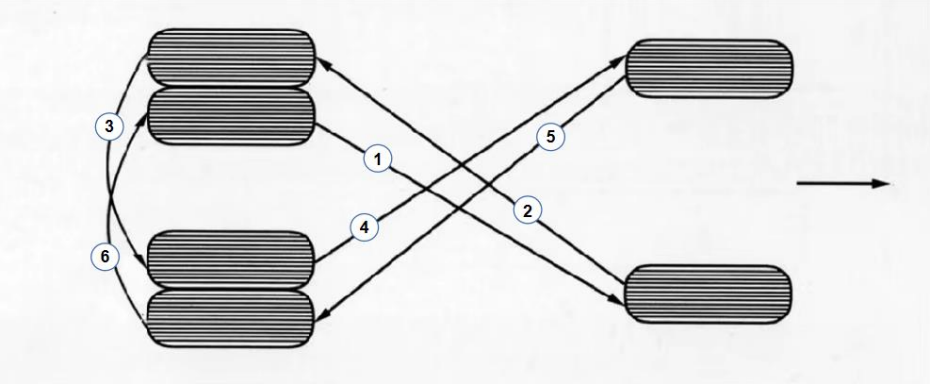

Figure 224 Tire Replacement Diagram

If the tire pressure is 20% lower than normal, it will increase the power consumption by about 8%; When the air pressure is high, the consumption decreases, but the tire life becomes shorter and the adhesion decreases, so it is necessary to choose the tire and tire pressure correctly.

4. Precautions for tire use

(1) The tire pressure must meet the standard specified pressure. Do not drive at low or high pressure. The tire pressure must be checked while the tire is cool, and it is not allowed to adjust the pressure while the tire is hot.

(2) When driving on the highway, take a 15 minute break every 2 hours.

(3) When inflating tires, they should be inflated slowly and the air pressure should be increased slowly to avoid damage to the tires and wheels caused by sudden increases in air pressure.

(4) The tire pressure should be checked once a week, and tires with anti-skid chains should be weighed and installed. If not in use, they should be removed immediately.

(5) The tire wear mark is a safety use mark for tires. When the tire surface wear reaches the wear mark, it should be stopped from use.

(6) Before dismantling, the air inside the tire should be completely expelled to ensure the safety of the dismantling personnel.

(7) To ensure driving safety, all wheels are not allowed to be fitted with refurbished tires.

(8) Before driving, it is necessary to check the tire pressure, wear condition, external scratches, and the presence of nails. Once external damage is found, it should be stopped immediately.

(9) When crossing road obstacles or potholes, one must slow down.

(10) When replacing a tire, the new valve must be updated at the same time, and tires with inner tubes must also be replaced with new inner tubes when replacing the tire.

(11) Perform a rotation and balance check every 12000-15000km of driving.

⚠注意
Please refer to the Warranty Service Management Manual for details.

6.21.4.Maintenance content for each mileage segment

8. Maintenance of vehicles every 4000km

(20) Check the acceleration and deceleration performance.

(21) Check the cleanliness and remaining amount of lubricating oil.

(22) Check the free travel of the brake pedal.

(23) Check for oil leakage in the steering gear and hydraulic pipelines.

(24) Clean the front and rear axles and wheel assemblies.

(25) Check the tightening of various nuts in the steering system.

(26) Check the rotation of the steering wheel for looseness or vibration.

(27) Check the fastening condition of the steering gear.

(28) Check the braking efficiency of the brake and parking spring.

(29) Check whether the brake soft and hard pipes are leaking, damaged, and connected securely.

(30) Check the tightening of the bolts connecting the cross shaft flange of the transmission shaft.

(31) Check the tightening condition of the half shaft bolts.

(32) Check tire pressure and tightening torque of wheel bolts and nuts.

(33) Check for abnormal tire wear.

(34) Lubricate each lubrication point of each vehicle according to the lubricating oil table.

(35) Check the fastening of all battery connectors and add distilled water.

(36) Check the fastening condition of the frame connection bolts.

(37) Check the wheel alignment of the front independent suspension to avoid tire wear.

(38) The maintenance and upkeep of the new energy section can be found in the new energy user manual.

9. Maintenance of vehicles every 8000km

Same as the 4000km maintenance project.

10. Maintenance of vehicles every 12000km (including 8000km maintenance)

(1) Clean, lubricate, and adjust the wheel hub bearings.

(2) Check the wear of the spline engagement pair of the steering transmission device.

(3) Check for looseness, vibration, and damage in the connecting parts of the steering gear.

(4) Check the installation and fastening of various components in the hydraulic system.

(5) Check for looseness in the cross shaft bearings of the drive shaft and inspect the tightening of the flange nuts.

(6) Check and adjust the front harness.

(7) Lubricate the various lubrication points of the vehicle.

(8) The maintenance and upkeep of the new energy section can be found in the new energy user manual.

11. Maintenance of vehicles every 24000km (including 12000km of maintenance)

(1) Replace the hydraulic oil and oil tank filter element of the power steering hydraulic system.

(2) Check if the connection part of the steering knuckle is loose.

(3) Check the wear and damage of the brake drum and brake shoe friction pads.

(4) Check if the electric air compressor is working properly.

12. Maintenance of vehicles every 36000km (including 24000km maintenance)

Check the working condition of the cylindrical shock absorber.

13. Maintenance of vehicles every 48000km (including 36000km maintenance)

(1) Tighten all types of bolts (including suspension).

(2) Check the clearance and internal leakage of the steering gear.

(3) Check for wear and damage to the connection between the horizontal and vertical tie rods and the joint arm.

(4) Check for cracks in the steering knuckle, steering knuckle arm, and their connecting parts.

(5) Check the clearance between the steering knuckle and the front axle.

(6) Check the alignment of the front wheels.

(7) Check the steering angle of the front wheels.

(8) Check the sealing efficiency of the brake valve and other valves.

(9) Check if the wheel brake chamber is working properly and if it is damaged.

(10) Check the wear of the front and rear steel plate pin sleeves and replace them if necessary.

(11) Check the welds and components of the frame and body for cracks, and ensure that the connecting bolts and rivets are not loose.

14. Maintenance of vehicles every 80000km (including 48000km of maintenance)

(1) Disassemble and inspect the rear axle main reducer assembly, make adjustments, and perform magnetic testing on the half axle sleeve.

(2) Disassemble and inspect the joints of the steering tie rod and straight rod, replace the ball joint pins of

the steering system, and perform magnetic inspection on the steering knuckle.

(3) Check the function of the shock absorber, and for those that have deteriorated or failed, they should be sent to a repair shop for replacement.

(4) Disassemble and inspect the front and rear steel plate springs, and replace the front and rear steel plate spring pin sleeves.

(5) Disassemble and inspect the parking and service brakes.

⚠注意

Please refer to the Warranty Service Management Manual for details (if different from the Warranty Manual, the Yaxing Warranty Service Management Manual shall prevail).

6.22.Vehicle maintenance and upkeep

6.22.1.Precautions for Vehicle Maintenance

1. The vehicle body should be kept clean regularly, and should be cleaned promptly after daily driving. It is not allowed to use tools to scrape or scrape to avoid scratching the paint and causing damage to the skin.

2. The sealing strips of doors and windows should be kept intact and replaced promptly if damaged.

3. It is prohibited to clean the painted parts of the car body with hot water, alkaline water, kerosene, and other oils that are harmful to the paint.

4. Regularly inspect the body frame, chassis, and their connecting parts. If any abnormalities are found, they should be promptly checked and repaired at our designated maintenance service station.

5. Regularly check the fasteners of the car's interior components and tighten them in a timely manner.

6. Regularly check the condition of the passenger door and adjust it promptly if there are any abnormalities.

7. Regularly check the lighting condition of the bus and replace it promptly if it is damaged.

8. Regularly inspect the safety roof windows and emergency doors to ensure their emergency functions are intact.

9. Regular professional maintenance can preserve the value of your bus and extend its service life. Regular maintenance of the vehicle surface and paint damage is also a prerequisite for obtaining warranty rights.

10. When there are grease and other stains on the vehicle body, it is necessary to clean the vehicle.

⚠注意

- When purchasing maintenance products, it is necessary to prioritize environmentally friendly products.
- Please separate unused maintenance supplies from household waste.
- Protect the body paint and maintain good driving visibility.

警告

●Misuse of maintenance products may be harmful to health.

●Care products must be stored safely, especially not in contact with children, otherwise there is a risk of poisoning

6.22.2.Car wash

Frequent car washing is the best way to protect buses from harmful environmental impacts. The time interval for cleaning buses depends on the frequency of vehicle use, road conditions, storage location, season, climate conditions, environment, etc.

The insect bodies, bird droppings, resins, road dust, industrial dust, asphalt, coal smoke particles, chemical salts, and other corrosive deposits attached to the exterior of a bus will cause greater damage to the bus paint over a longer period of time. High temperatures and strong sunlight exposure will exacerbate the erosion effect. Therefore, if there are stains on the exterior of the vehicle, they should be cleaned in a timely manner。

警告

●When cleaning buses in winter: Moisture or ice in the braking system can reduce braking effectiveness and pose a danger.

●At any time when cleaning the vehicle, it is necessary to avoid water ingress into the brake lines, and waterproof measures must be taken for components such as batteries and electrical control devices.

4.Preparation before vehicle cleaning

(5)Park the vehicle steadily, switch to neutral (N gear), and pull up the parking brake lever.

警告

Failure to follow the above requirements may result in vehicle collision or personal injury accidents when the vehicle automatically slides or suddenly starts.

(6) Turn off the ignition switch, main power switch, and power handle switch of the vehicle in sequence.

警告

- Irregular power outages may cause vehicle damage or personal injury.
- Without power outage, washing the car may pose safety risks to individuals and property.

(7)Close doors and windows

警告

Failure to close doors and windows can cause liquid to enter the car, resulting in electrical component failure.

(8)Be sure to keep the keys safe to avoid vehicle damage or personal injury accidents.

5.External cleaning of vehicles

(5) Precautions for cleaning outside the car

g. When there are obvious dirt, bird droppings, resin and other stains on the exterior of the vehicle, it is necessary to clean the vehicle. Protect the body paint and maintain good driving visibility.

h. It is best to wet wash the headlights and other lighting fixtures with soapy water, rinse them with clean water, and do not wipe them with a cloth.

i. When cleaning passenger cars on a daily basis, do not aim the cleaning water pipe at the edges and corners of the sliding window movable glass to prevent high-pressure water jets from seeping into the car.

j. At any time when cleaning the vehicle, it is necessary to avoid water ingress into the brake lines, and waterproof measures must be taken for components such as batteries, electrical control devices, etc. during car washing. Otherwise, it will affect vehicle safety and cause significant personal injury.

k. When there is water accumulation on the ground, please clean it up in a timely manner, otherwise it may cause people to slip due to water accumulation or winter icing, resulting in personal safety accidents.

l. When cleaning high-voltage components such as battery systems, drive motors, steering motors, electric air compressors, electric defrosters, integrated controllers, chargers, charging sockets, high-voltage cables, connectors, and rear high-voltage compartment doors, please use an air gun for cleaning.

警告

- It is prohibited to use circular or rotary nozzle water guns to clean vehicles, otherwise it may cause harm to the vehicle.
- It is prohibited to use high-pressure water guns to flush the air intake grille, luggage compartment door seams, and lubrication areas.
- Do not directly flush the radiator and cooling fan blades with high-pressure water.

警告

- When cleaning vehicles in winter, if using a water pipe to wash the vehicle, it is strictly prohibited to aim the sprayed water at the seams of the car lock, door, and compartment door, otherwise there is a risk of freezing.。
- Do not use rough objects to wipe the surface of the car body to prevent scratching the paint film.
- It is strictly prohibited to use hot water to rinse frozen glass, as it may cause the glass to explode.
- Strictly prohibit using wet cloths, mops, or organic solvents such as water and alcohol to wash high-pressure components, otherwise it may cause abnormal vehicle operation, insulation failure, and pose a risk of electric shock or fire.

(6) Car lock cleaning

Timely clean the ice, snow, and dirt on the lock body. Otherwise, it may cause the lock cylinder to be blocked or corroded, resulting in the car lock being unable to open.

(7) Aluminum alloy wheel cleaning

In order to maintain the aesthetic appearance of aluminum alloy wheels for a long time, specialized aluminum alloy protective cleaning agents are needed for manual cleaning and maintenance. If the chemical salts and brake debris on the wheels are not washed away in a timely manner, the aluminum alloy material will be corroded, affecting the appearance and strength of the wheels.。

(8) Bottom protective layer cleaning

The damping glue and chassis protection wax sprayed on the inner side of the vehicle's skirt skin can reduce the impact of vehicle vibration, stone impact, and corrosion on the vehicle's lifespan. Attention should be paid to protection when cleaning the vehicle.

注意

Due to the unavoidable damage to the protective layer of the vehicle during use, it is recommended that you periodically inspect the protective layer on the bottom and chassis of the vehicle, especially before and after the start and end of the cold season when repairs are needed.

6.Clean the interior of the vehicle

(7) Floor leather cleaning

First, clean the surface of the floor leather to avoid rubbing the surface of the floor cloth with hard objects such as sand particles, and then use a semi dry mop to clean it.

⚠警告

- Do not use organic solvents such as acetone, cyclohexanone, concentrated alkaline water, etc. to scrub, to prevent the floor leather from peeling off, welding parts from cracking, and edges from warping. For more severely dirty areas, neutral cleaning agents or detergents can be used to wipe them clean.
- Do not rinse with water, otherwise it may cause water to paint through the joints, break the forest bond, and cause phenomena such as floor decay, warping, and odor.
- Be careful not to scratch or wear the floor leather with sharp objects or other hard objects.

(8) Seat belt cleaning

Clean the seat belt with stains using neutral soap solution (1 liter of water and 2 spoons of neutral soap powder).

⚠警告

- Do not remove the seat belt for cleaning, and the seat belt must be dry when rolled up
- Do not use chemicals to clean seat belts; Because such cleaning agents can damage the fabric of the seat belt, and the seat belt must not come into contact with corrosive liquids.
- If damage is found to the seat belt fabric, connectors, buckles, etc., they must be replaced.

(9) Leather cleaning

c. a. Artificial leather: Clean artificial leather with a damp cloth. If stains cannot be removed, only specialized solvent-free plastic cleaning and curing agents are allowed for cleaning.

d. b. Natural leather: Special attention and care are needed for natural leather.

◆ Regular cleaning: Use a slightly damp cotton or wool cloth to remove dirt from the surface of the leather.

◆ Severe stains: Dip a cloth in neutral soap solution (two spoons of neutral soap powder dissolved in one liter of water) and use it to remove more severe stains.

◆ For special stains (such as ballpoint pen, marker pen, nail polish, latex paint, shoe polish, etc.), please use special stain remover for leather.

Kind reminder: Use a specialized leather care agent to maintain leather every six months.

⚠注意

- Avoid parking the vehicle in strong sunlight for a long time to prevent leather from fading. If the car has to be parked outdoors for a long time, cover the leather to prevent direct sunlight from shining on it.

⚠注意
● When cleaning, be careful not to let any part of the leather be soaked in water, and do not let water enter the pinholes at the seams, otherwise it will damage the leather. ● Clean the leather every two to three months to promptly remove any new stains, otherwise it may damage the leather. ● Quickly remove any new stains left by ballpoint pens, ink, lipstick, shoe polish, etc. ● When measuring the distance between seats, please remove the additional seat covers to avoid them affecting the distance between seats.

(10) Fabric cleaning

a. Ordinary cleaning

Special cleaning agents or soft sponges should be used for cleaning. For water stains that have just fallen onto the seat, use a cloth or tissue with good water absorption to remove them as soon as possible.

b. Severe stains

Wet a cloth with neutral soap solution, then use it to remove stains. After cleaning, dry it with a soft dry cloth.

⚠注意
Avoid scratching the fabric with sharp objects.

(11) Cleaning of interior decorative parts

Interior refers to non-woven materials such as front and rear panels, side panels, roof coverings, and armrests inside the car. Due to the high temperature and humidity environment, vehicles that are parked for a long time without ventilation are prone to mold growth. Therefore, during the period when the vehicle is stopped, the doors and windows should be opened every 2 weeks for ventilation to circulate the air inside the vehicle. If the vehicle operates in rainy season or hot and humid summer weather, the surface of the interior parts should also be cleaned and maintained every 2-4 weeks.

When cleaning, use a white clean damp cloth to clean and let it dry naturally. For more serious stains, use a cleaning agent to clean and wipe with a white clean cloth, otherwise there may be residual cleaning agent.

⚠警告
● When cleaning high-voltage components such as electric heaters, high-voltage cables, and connectors, air guns can be used for cleaning. It is strictly prohibited to rinse the above high-voltage components

警告

with organic solvents such as water and alcohol. It is also strictly prohibited to wipe the above high-voltage components with wet cloths, wet mops, or organic solvents such as alcohol. Otherwise, it may cause abnormal vehicle operation, insulation tips, and pose a risk of electric shock or fire.

- It is strictly prohibited to clean the electrical components area of the dashboard with water. When cleaning, please use an air gun to handle it, otherwise it may cause abnormal operation of the electrical equipment and pose a risk of fire.

(12) Driving and pedal area cleaning

Clean and use car vacuum equipment to thoroughly clean the driving and pedal areas, preventing debris from obstructing the driver's pedal operation.

警告

There are debris in the driving and pedal area, which can hinder the driver's operation of the pedal and cause major traffic accidents.

6.23.Vehicle Parking

6.23.1.Parking Requirements

3. Parking precautions

It is not recommended to park the vehicle for a long time. Long term parking will change the characteristics of the entire vehicle parts, reduce the safety performance of the vehicle, shorten the service life of the vehicle, and increase the cost of use.

(5) When parking the vehicle, all electrical switches should be turned off, the ignition key should be turned off, the main power switch should be turned off, and the low-voltage handle switch should be turned off. It is strictly prohibited to unplug the manual maintenance switch when parking;

(6) Vehicles should not be parked with faults. If there are faults, they should be resolved before parking;

(7) When parking the vehicle, the passenger door, windows, and compartment door should be locked, and airbag suspension vehicles should also be equipped with airbag protection pads;

(8) When vehicles are parked, the parking lot should have video surveillance and maintenance personnel conducting regular inspections;

4. When parking a vehicle, it is required to follow the following table to find the content for maintenance and upkeep.

Parking Requirement 1 (Parking Time T ≤ 15 days)

Project	**Requirement**	**Remarks**
Suspension time	T ≤15 days	Continuous parking time
ambient temperature	-35℃～55℃	
Battery compartment temperature	-25℃～45℃	
Humidity range	＜85%RH	
Stay away from heat sources	≥3 meters	
Stay away from flammable materials	≥3 meters	
Low voltage power outage	Disconnect the main switch of the low-voltage power supply	
Remaining battery capacity	30%≤SOC≤80%	
Fire fighting equipment	The car is equipped with a fire extinguisher	

Parking requirement 2 (15 days<parking time T ≤ 90 days)

project	**Requirement**	**Remarks**
Suspension time	15 days＜T ≤90 days	Continuous parking time
ambient temperature	-35℃～55℃	
Battery compartment temperature	-25℃～45℃	
Humidity range	5%RH～75%RH	
Stay away from heat sources	≥3 meters	
Stay away from flammable materials	≥3 meters	
Low voltage power outage	Disconnect the main switch of the low-voltage power supply	
Remaining battery capacity	40%≤SOC≤70%	Suggest around 60%
Lead acid battery	Remove and recharge once a month	New and old batteries are not allowed to be mixed for use

project	**Requirement**	**Remarks**
Fire fighting equipment	The car is equipped with a fire extinguisher	

Parking Requirement 3 (Parking Time T>90 days)

project	requirement	**Remarks**
Suspension time	T>90 days	Start the vehicle every 90 days to charge and discharge the high-voltage energy storage components for maintenance
Environmental requirements	Sunshade and shelter from rain	Rain shelter, avoid direct sunlight
ambient temperature	-35℃～65℃	ambient temperature
Battery compartment temperature	-35℃～65℃	
Humidity range	5%RH～75%RH	
Stay away from heat sources	≥ 3 meters	
Stay away from flammable materials	≥ 3 meters	
Low voltage power outage	Disconnect the main switch of the low-voltage power supply	
Remaining battery capacity	40%≤SOC≤70%	Suggest around 55%
Lead acid battery	Remove and recharge once a month	New and old batteries are not allowed to be mixed for use
Fire fighting equipment	The car is equipped with a fire extinguisher	

6.23.2.Requirements for vehicle parking areas

1. The parking area for vehicles should be kept away from gas stations, refueling stations, heat sources, accumulated water, corrosive substances, and flammable and explosive materials;

2. The parking area for vehicles should have good drainage function to avoid the phenomenon of water flooding the power battery;

3. The parking distance between vehicles should not be less than 1 meter on both sides, and the distance between the front and rear passages should not be less than 5 meters;

4. The vehicle parking area should have sufficient fire-fighting facilities, with dedicated fire exits for fire trucks to enter and exit, and the width of the exit should not be less than 4.0 meters;

5. The SOC of scrapped vehicles should not exceed 30% when parked;

6. The optimal temperature for vehicle parking is 5 ℃~30 ℃, and the humidity is 5% RH~75% RH;

7. If the vehicle has been parked for more than 1 year, it is necessary to contact the after-sales service personnel or battery manufacturer to test the power battery and confirm its condition before using it again.

6.23.3.Inspection Items

4. Long term (parking time exceeding 30 days) vehicle inspection

During the suspension period of long-term parking of vehicles, relevant inspections should be carried out according to the table below.

Initial inspection contents for parking

Inspection items	Inspection content	Inspection cycle
meter	Start the vehicle and visually inspect the instrument panel. There should be no fault alarms, no fault lights on, and no fault codes displayed. Contact after-sales service personnel for inspection and handling in a timely manner if any abnormalities occur.	monthly
Battery	The 24V low-voltage lead-acid battery has no power loss, and the instrument displays no power loss symbol.	monthly
Power battery	Check the SOC value of the power battery, which should meet the storage requirements, and there should be no battery fault alarm on the instrument. When the SOC is too low, it should be recharged for treatment. If there is a fault, contact service personnel.	monthly
Water, oil, and gas pipelines	Visually inspect the sealing condition of each pipeline, and there should be no water leakage, oil leakage, or air leakage.	monthly
Various categories	Open the passenger door and ventilate for 0.5 hours. The interior of the car is dry and odorless. The opening and closing of each warehouse door are in good condition.	monthly
Whole vehicle	Drive the vehicle for more than 5km (if installing airbag pads, they should be removed first before moving), ensuring that all mating surfaces are evenly lubricated. Check that all low-voltage electrical	monthly

Inspection items	Inspection content	Inspection cycle
	components are working properly, and that the drive system and auxiliary control components are working properly.	

警告
Failure to conduct inspections as required will pose safety risks, affect the normal operation of vehicles in the later stage, and increase the risk of malfunctions.

5. Inspection items for re transportation after long-term parking

After the vehicle has been parked for a long time (more than 30 days), the electrical components should be inspected according to the following table when restarting.

Vehicle restart inspection content

Inspection items	检查内容
meter	1. Check if the instrument displays serious faults such as battery, motor, insulation, etc. 2. The instrument displays the SOC value, and if it is below 30%, it needs to be charged in a timely manner.
Inspection of power battery compartment	1. Require the terminals on each battery box to be re tightened. If using quick connectors, confirm that the locking mechanism is in place and not loose. 2. Is there any exposed electrode of the power battery; Check if each electrode connection harness sheath covers the electrode. If not, manually move the sheath to cover the electrode to ensure there are no exposed electrodes. 3. Insulation resistance inspection, using a megohmmeter (1000V range) to measure the total positive and total negative output of the power battery and the insulation resistance to the vehicle body ground (or metal shell). If the insulation resistance value is ≥ 3 megohms, it is judged that the insulation is normal; 4. Dust cleaning: Excessive dust on the heat sink affects heat dissipation; Excessive dust at the power connection may cause low insulation; Use a dry cloth or chicken feathers to dust off and keep it dry and clean.

Inspection items	检查内容
	5. Check whether there is any deformation or damage to the fixed points of the battery box under stress; 6. Check if there is water accumulation in the battery compartment. If there is water accumulation, please investigate the source of the leak and seal it in a timely manner.
Integrated controller and its driving motor	1. The high-voltage cables inside the five in one controller are firmly wired without looseness, the insulation layer is not damaged, and the PG plug of the wiring port is tightened (required to be screwed to the bottom of the thread); Is the bolt on the protective cover tightened (required to be tightened to the bottom of the thread) 2. The fixing bolts of the drive motor should be tightened without looseness, or the controller should be pushed firmly and reliably by hand without shaking. 3. The connection of the cooling pipeline joint is reliable, and there is no leakage of coolant. 4. The grounding wire connection between the five in one controller and the drive motor housing is secure and not loose. 5. After the vehicle enters the driving mode, the temperature of the motor and controller increases, and there is no high temperature alarm after driving for a period of time.
Electric hydraulic power steering pump	1. Check the rotation of the steering wheel, whether it is loose or trembling, and whether the steering is normal; 2. Check if the electric hydraulic oil pump is working properly and if the wiring is loose. 3. The pump and motor are securely connected, and the bolts are not loose. The bolts of the shock absorber pad connected to the chassis are not loose, and the shock absorber pad is intact without damage. The high-voltage cable and the grounding wire of the casing are securely connected without any looseness. 4. The hydraulic pipeline joints are securely connected without leakage, and the oil level of the steering oil tank is within the marked line range. 5. If the shutdown time exceeds one year, the steering hydraulic oil needs to be replaced, and the oil tank and pipeline system need to be cleaned. When removing dirt and changing oil, the oil tank, oil filter, and pipeline need to be carefully cleaned.

Inspection items	检查内容
Electric air compressor	1. The air compressor assembly is securely connected to the chassis, with no loose bolts and intact shock absorbers. The high-voltage cable and the grounding wire of the casing are securely connected without any looseness. 2. The connection of the pneumatic pipeline head is secure and there is no air leakage. 3. The lubricating oil of the oil type air compressor should also be checked, and there should be no obvious emulsification phenomenon in the lubricating oil. The filling amount should meet the requirements. If the shutdown time exceeds 1 year, the lubricating oil needs to be replaced.
Cooling system	1. The radiator assembly is firmly and intact connected to the chassis, and the surface of the radiator should be clean without obvious foreign objects attached. The fan should rotate flexibly without any abnormal noise. 2. Clean the dust on the surface of the water pump, and ensure that the fixing bolts of the water pump are firm and not loose. 3. All connecting pipelines are well connected, without damage or rubbing. 4. The connectors for the cooling fan and water pump are securely connected, and the wiring harness is not worn.
Vehicle controller	1. The plug-in wiring is firm and installed without looseness. 2. Clean the surface of the shell and keep it dry and clean.
Vehicle wiring harness inspection	1. The high-voltage cable with an orange outer sheath should be free of damage, securely tied and fixed, and have no rubbing parts. 2. The grounding wire bolt of the high-voltage device casing is firm and not loose. 3. The high-voltage cable installation fixing card is not loose and is well fixed.

6. Special instructions

The maintenance and upkeep of high-pressure components such as power batteries, integrated controllers, drive motors, electric air compressors, and electric power assisted oil pumps shall be based on the maintenance manual provided by the actual vehicle installation manufacturer.

Chapter 5 Appendix

6.24.Torque of commonly used bolts and nuts for automotive chassis

6.24.1.Common Torque Parameter Table

Serial number	Name	Material Science	Level	Specification or structure	Standard value (N·m)	Torque Range (N·m)
1	Front U-bolt	40Cr		M16X1.5	240	200-270
				M18X1.5	260	220-290
				M20X1.5	280	250-300
2	Rear U-bolt	40Cr		M18X1.5	260	220-290
				M20X1.5	280	250-300
				M22X1.5	330	294-345
3	Connecting bolts between steering gear and bracket	40Cr	Level 10.9	M14X1.5	180	146-205
				M16X1.5	240	199-270
				M18X1.5	320	287-346
				M20X1.5	430	390-460
				M22X1.5	510	460-560
4	Tire Nut	Standard parts		M18X1.5	430	397-457
				M20X1.5	570	540-596
				M22X1.5	600	570-630
				M24X1.5	660	620-700
5	Transmission shaft cross joint connecting bolt	Standard parts		M14X1.5	180	146-205
				M16X1.5	240	199-270
				M18X1.5	320	294-345
6	Horizontal and straight tie rod ball pin nut	Standard parts			180	150-210
7	Steering rod ball pin nut	Standard parts			180	150-210

Serial number	Name	Material Science	Level	Specification or structure	Standard value (N·m)	Torque Range (N·m)
8	Clutch pressure plate fastening bolt	Standard parts	Level 8.8	M10X1.5	59	49-75
9	Tightening bolts forfly wheel housing	Standard parts	Level 10.9	M12X1.5	97	73-110
		Standard parts	Level 10.9	M10X1.5	75	52-90
10	Connecting bolts for upper and lower shock absorbers	Standard or self-made parts		M18X1.5	140	100-180
				M20X1.5	140	
				M22X1.5	140	
				M24X1.5	140	

⚠注意

The maximum error of tightening torque for tire threads shall not exceed 20% of the specified torque range; For different structures of steering gears, the connection method is different and the torque is also different (see attachment: installation torque corresponding to some power steering gears).

6.24.2.Table of torque parameters for Shibiluo nuts

Serial number	Name	Specifications	Torque Range (N·m)
1	Anti loosening nut	ZG6177.2 M24X2-10F2	800-900
2	Anti loosening nut	ZG6177.2 M22X1.5-10F2	630-670
3	Anti loosening nut	ZG6177.2 M20X1.5-10F2	470-530
4	Anti loosening nut	ZG6177.2 M18X1.5-10F2	320-360
5	Anti loosening nut	ZG6177.2 M16X1.5-10F2	230-260
6	Anti loosening nut	ZG6177.2 M14X1.5-10F2	160-180
7	Anti loosening nut	ZG6177.2 M12X1.25-10F2	95-110

Serial number	Name	Specifications	Torque Range (N·m)
8	Anti loosening nut	ZG6177.1 M10-10F2	50-60
9	Thickened anti loosening nut	ZG-F-097 M24X2-10F2	800-900
10	Thickened anti loosening nut	ZG-F-132 M22X1.5-10F2	630-670

6.24.3.Bolt and nut torque without special instructions

For bolts and nuts without special instructions, refer to the "QC/T518-1999 Specification for Tightening Torque of Automotive Threaded Fasteners".

(4) (1) The tightening torque for T-shaped clamps, Jimei clamps, and bolts without special instructions is 5N · m;

(5) (2) For cases where the tightening torque cannot be checked at the nut end, the tightening torque at the bolt end can be tested, with the standard torque being a 20% increase in the torque at the nut end;

(6) (3) The torque of commonly used fasteners is shown in the table below:

Thread diameter mm	Pitch mm	Level	Tightening torque（N·m）		
			Standard value	Maximum value	Minimum value
6	1	8.8	9	12	6
8	1.25	8.8	23	26	16
10	1.5	8.8	59	75	37
12	1.75	8.8	95	111	73
12	1.5	8.8	97	113	75
12	1.25	8.8	99	115	78
14	2	8.8	160	185	122
14	1.5	8.8	180	205	146
16	2	8.8	215	245	182
16	1.5	8.8	240	270	199
18	2.5	8.8	268	298	229
18	1.5	8.8	316	346	287

Thread diameter mm	Pitch mm	Level	Tightening torque（N·m）		
			Standard value	Maximum value	Minimum value
10	1.5	10.9	74	90	52
12	1.75	10.9	140	156	105
12	1.5	10.9	142	158	106
12	1.25	10.9	145	161	108
14	2	10.9	175	200	141
14	1.5	10.9	210	235	178
16	2	10.9	280	310	200
16	1.5	10.9	305	335	240
18	2.5	10.9	437	467	380
18	1.5	10.9	467	507	397

⚠注意

The above list does not require any special instructions. During inspection, it is considered qualified if the spring pad is flattened, undamaged, and the torque meets the assembly requirements.

6.25.Brake disc/drum parameters

disc brake				
Adapt to brake specifications	Initial brake disc size Diameter x Thickness mm (millimeters)	Brake disc Ultimate thickness mm (millimeter)	Initial brake pad thickness (including backplate mm)	Ultimate thickness of brake pads (including backplate mm)
pressure22.5"	φ430×45	37	30	12
pressure19.5"	φ377×45	37	30	11

Drum brake			
Serial number	Adapt to brake specifications	Initial inner diameter of brake drum	Limit inner diameter of brake drum (not greater than)
1	Φ360×160	Φ360	Φ363

2	Φ400×180	Φ400	Φ404
3	Φ400×220	Φ400	Φ404
4	Φ410×220	Φ410	Φ414
5	Φ320×160	Φ320	Φ323
6	Φ310×130	Φ310	Φ313

6.26.Installation torque corresponding to partial power steering gear

manufactor	Steering gear model	Tightening torque of hanging arm nut	Tightening torque of steering gear installation bolts (10.9 level) (N·m)
ZF	ZF8090 955 191	350N·m±10%	400N·m±10%
	ZF8095_957_102	520N·m±10%	520N·m±10%
	ZF8095_957_103	520N·m±10%	
	ZF8098_957_107	700N·m±10%	520N·m±10%
	ZF8098_957_108	700N·m±10%	
	ZF8098_957_112	700N·m±10%	
	ZF8098_957_114	700N·m±10%	
	ZF8098_957_124	700N·m±10%	
	ZF8098_987_110	700N·m±10%	
Jiangmen	YZ-ZJ120CY/Z(with hanging arm)	550±55N·m	500±50N·m
	ZJ120C-113	550±55N·m	
	ZJ120C-108	550±55N·m	
	GX100C-25	520±50N·m	
	GX100D	430±30N·m	
	GX90CZ/Z	375±20N·m	
	ZJ100D-01	520±50N·m	
	GX85C-28	330±30N·m	
	GX100C-122	520±50N·m	
	YZ-ZJ120CY/Z Excluding hanging arms	550±55N·m	

manufactor	Steering gear model	Tightening torque of hanging arm nut	Tightening torque of steering gear installation bolts (10.9 level) (N·m)
	GX100D-60-75	425±25N·m	
Chaoyang	CPS82A(with hanging arm)	247±30N·m	390-460N·m
	PS10080	247±30N·m	287-346N·m
	PS10080AF	247±30N·m	287-346N·m
	CPS82F	247±30N·m	390-460N·m
Gangyang	GX120BX	500N·m±10%	560±16N·m
	GY120FX	500N·m±10%	
	GY85B(with hanging arm)	110-130N·m	
	GY85H	110-130N·m	
	GY100B	170-230N·m	
	GY90TA	280-320N·m	

⚠注意
For different structures of steering machines, the connection method is different and the torque is also different.
The flat pads, spring pads, and bolts removed from the three-phase line should be tightened by hand and adjusted
M8 bolt torque 25 ± 2N · m
M10 bolt torque 30 ± 2N · m

6.27.Technical documents accompanying the vehicle

When delivering the car, the accompanying manual mainly includes:：

12. User Manual for Integrated Controller

13. User Manual for Drive Motor

14. User Manual for Electric Air Compressor

15. User Manual for Electric Power Assisted Oil Pump

16. Instructions for using power batteries

17. Air conditioner user manual

18. User Manual for Warm Air

19. Monitor User Manual

20. Audio User Manual

21. ABS Anti lock Braking System User Manual

22. Air Suspension User Manual

⚠注意
This user manual is used in conjunction with the accompanying manual. If there is an accompanying manual, the manual shall prevail; Due to differences in configuration among different vehicle models, the accompanying manual may be added or removed depending on the configuration. The actual vehicle shall prevail;

6.28. Power battery traceability

4. According to relevant national regulations, Yaxing Bus is responsible for the main responsibility of recycling waste power batteries, and users are not allowed to dispose of waste power batteries without authorization. When a power battery is scrapped, users should notify Yaxing Bus for recycling or send the waste power battery to Yaxing Bus recycling service outlets.

5. Yaxing Bus has established battery recycling service outlets throughout the country. Please visit the Yaxing Bus official website to check the service outlets.

6. The dismantling and dismantling of power batteries assembled by Yaxing Bus for sales have been announced, and information on harmful substances has been released. For inquiries, please visit the Yaxing Bus official website.

6.29.Main configuration parameters of the vehicle

model / Main parameter names	JS6120GHBEV
External dimensions (Length x Width x Height) (mm)	12180×2550×3420
Names and locations of components not included in the overall dimensions of the vehicle	External rearview mirrors (left and right side panels), external signs (left and right side panels), wipers (front panel), front logo sign (front panel), water channel (on both sides of the front panel and above the passenger door), external emergency valve (right side panel), side sign lights (left and right side panels), side turn signals (left and right side panels), door locks (left and right side panels), soft antenna (roof), reversing assist device (rear panel), camera (front, rear panel and left and right side panels)
Total Quality(kg)	19500
Wheelbase(mm)	5900
Minimum turning diameter（m）	22
Minimum ground clearance （mm）	130
Drive form	Rear drive
Anti lock braking system	EBS

Maximum climbing gradient（%）	≥20%
Maximum speed(km/h)	80
Rated passenger capacity (including driver) (person)	(Location for people with disabilities)29/56/1,(No disability positions available)29/66/0 option1 Disabled 25/60/1 No disabled individuals 25/70/0 option2 Disabled 34/47/1 No disabled individuals 34/57/0 option3 Disabled 30/53/1 No disabled individuals 30/63/0 option5 Disabled 29/54/1 No disabled individuals 29/64/0 option6 Disabled 36/44/1 No disabled individuals 36/53/0 option7 Disabled 32/50/1 No disabled individuals 32/60/0 option8 Disabled 31/52/1 No disabled individuals 31/62/0 option9 Disabled 31/51/1 No disabled individuals 31/60/0
Front suspension/rear suspension(mm)	2800/3480
Approach angle/departure angle(°)	6/6
Number of steel plate springs (front/back)	-/-
Front wheelbase(mm)	2110

Rear wheelbase(mm)	1880
Tire specifications	275/70R22.5
Engine (drive motor) model	TZ368XSPE300WH
Rated power/torque(kW/N·m)	145/1100
Peak power/torque(kW/N·m)	245/3329
Rated working pressure of gas storage cylinder(kPa)	1000
Brake chamber response time（s）	≤0.60
Note: The actual vehicle configuration shall prevail	

ASIASTAR

扬州亚星客车股份有限公司



星级客车 钻石品质

STAR BUS DIAMOND QUALITY

地址：扬州（邗江）汽车产业园潍柴大道2号

Add：No. 2 Weichai Avenue, Hanjiang Automobile Industrial Park, Yangzhou City, Jiangsu Provinc